RF Manual 7th edition

Application and design manual for RF products

November 2005

PHILIPS

date of release: November 2005
document order number: 9397 750 15371

Henk Roelofs, Vice President & General Manager RF Products

Introduction

Welcome to the 7th edition of our RF Manual. We knew that the new focus of application-based information with fully interactive operation would pay off, but the appreciation expressed by our customers for the 6th edition of the RF Manual surprised even us. Thank you for your comments.

We are maintaining our RF Manual as a dynamic source of information. We have committed to updating the document twice a year to keep you informed of important developments for your applications.

Design-in tools

Chapter 3 is completely new. It includes design-in tools like S-Parameters, Spice models and demo boards. We have added this chapter to make it easier to find and get hold of design-in information and materials. There are web links or references to the Philips representative / authorized distributor.

NEW: BAW, Satellite, TIAs

In the 6th edition, we touched upon our BAW developments. In this edition we go much deeper to show you our BAW offerings and characteristics (Chapter 5).

The chapter on satellite outdoor units (LNB) is completely new. We have a complete portfolio to offer you one-stop shopping for LNB design (Chapter 6). Also completely new is a chapter on TIAs, digital fibre optic receiver modules for telecom, data networks and FTTx systems (Chapter 7).

RF Manual 7th edition APPENDIX

The appendix contains two new chapters to help designers on particular items: thermal design considerations on SMD discretes, and designing with the TZA 30x6 TIAs. The appendix is downloadable via the RF Manual web page, see link below.

Interactive

Simply 'clicking' on a product type takes you directly to the corresponding product information page on the Philips Semiconductor website.

RF Manual web page

http://www.philips.semiconductors.com/markets/mms/products/discretes/documentation/rf_manual

RF Products, marketing team

Karine Bouffard, Ruud van den Brink, Wil Konings, Kausik Mandal, Jos Peters, Pierre Ricard, Ronald Thissen, Joeri Voets, Jos Zeelen

Contents

1. Applications, recommended products and application notes . . . 6

1.1 Low-cost cellular phone front-end for ODM/CEM designs . . . 6
1.2 2.4 GHz front-end for WLAN, Bluetooth™, DECT, ZigBee™, etc. . . . 8
1.3 Low Noise Block (LNB) . . . 9
1.4 Global Positioning System (GPS) . . . 10
1.5 TV / VCR / DVD tuning . . . 11
1.6 Car Radio Receiver (CREST IC's: TEF6860HL, TEF6862HL) . . . 12
1.7 CATV Electrical (Line Extenders) . . . 13
1.8 CATV Optical (Optical Nodes) . . . 14
1.9 Optical Networking (SFF/SFP modules) . . . 15

2. Product Portfolio . . . 16

2.1 New products . . . 16
2.2 RF diodes . . . 17
2.2.1 Varicap diodes . . . 17
2.2.2 Pin diodes . . . 19
2.2.3 Band-switch diodes . . . 19
2.2.4 Schottky diodes . . . 20
2.3 RF Bipolar transistors . . . 21
2.3.1 Wideband transistors . . . 21
2.4 RF ICs . . . 23
2.4.1 MMICs . . . 23
2.5 RF MOS transistors . . . 24
2.5.1 JFETs . . . 24
2.5.2 MOSFETs . . . 26
2.6 RF Modules . . . 28
2.6.1 CATV Reverse Hybrids . . . 28
2.6.2 CATV Push-Pulls . . . 28
2.6.3 CATV Power Doublers . . . 29
2.6.4 CATV Optical Receivers . . . 29
2.7 Fibre-optic transceiver ICs . . . 30
2.7.1 Laser Drivers . . . 30
2.7.2 Trans Impedance Amplifiers . . . 30

3. Design-in tools . . . 31

3.1 S-Parameters . . . 31
3.1.1 Wideband transistors & MMICs . . . 31
3.2 Spice models . . . 31
3.2.1 Wideband transistors . . . 31
3.2.2 Field effect transistors . . . 32
3.2.3 Varicap diodes . . . 32
3.3 Application notes . . . 32
3.4 Demo boards . . . 32
3.5 Samples of products in development . . . 32
3.6 Samples of released products . . . 32
3.7 Datasheets . . . 32
3.8 Design-in support . . . 32

4. Cross-references & Replacements 33
4.1 Cross-references: Manufacturer types versus Philips types 33
4.2 Cross-references: Philips discontinued types versus Philips replacement types 33

5. High performance miniature BAW filters and duplexers 15

6. Satellite outdoor unit (LNB) 38

7. TZA30x6 39

8. Contacts and Web Links 40

1. Applications, recommended products and application notes

Philips RF Applications
http://www.semiconductors.philips.com/markets/mms/applications/index.html

Philips Application notes
http://www.semiconductors.philips.com/markets/mms/documentation/app_notes/

Philips Application notes MMIC's
http://www.semiconductors.philips.com/markets/mms/products/discretes/documentation/mmic_amplifiers_mixers/

Philips Application notes transistors
http://www.semiconductors.philips.com/markets/mms/products/discretes/documentation/transistors/

1.1 Low-cost cellular phone front-end for ODM/CEM designs

Application diagram

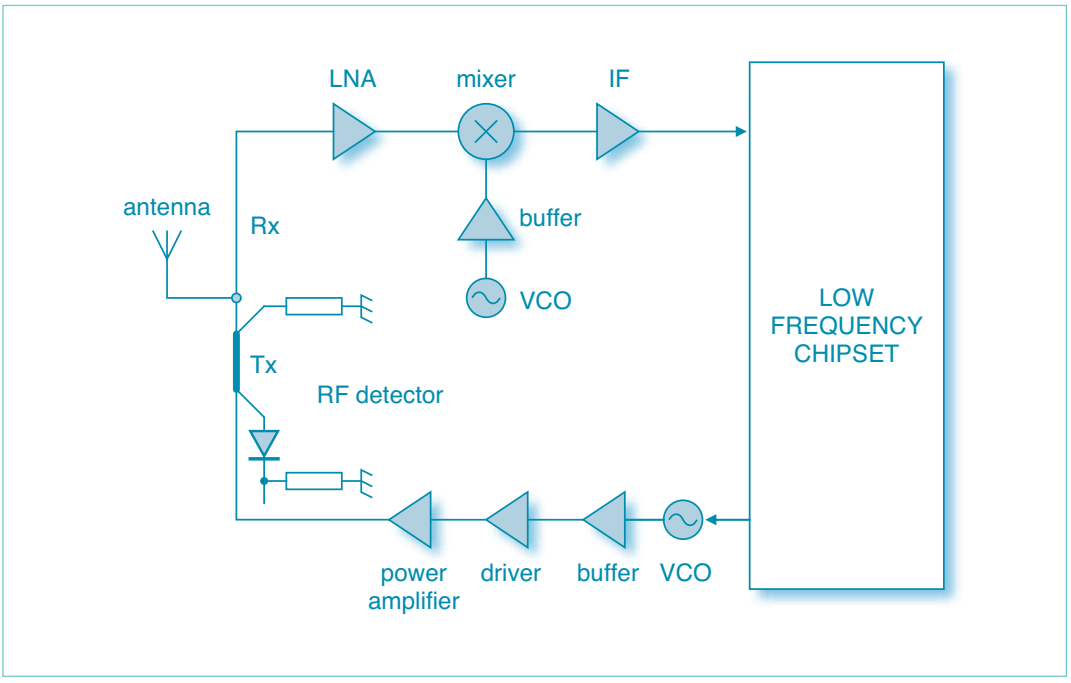

Recommended products

Function	Product		Package	Type
RF detector	RF Schottky diode	Low Cd Schottky	various	xxSB17
			various	xxSB62
			various	xxSB63
			various	xxSB82

Function	Product		Package	Type
Antenna switch	RF diode	PIN diode	various	BAP50
			various	BAP51
			various	BAP55
			various	BAP63
			various	BAP64
			various	BAP65
			various	BAP1321

Function	Product		Package	Type
LNA	MMIC	Low noise wideband amplifier	SOT343R	BGA2001
			SOT343R	BGA2003
			SOT363	BGA2004
			SOT363	BGA2011
			SOT363	BGA2012

Function	Product		Package	Type
Mixer	RF bipolar transistor	wideband transistor	SOT343	BFG410W
			SOT343	BFG425W
			SOT343	BFG480W
	MMIC	Linear mixer	SOT363	BGA2022

Function	Product		Package	Type
IF	MMIC	Low noise amplifier	SOT343R	BGA2001
			SOT343R	BGA2003
		Gen. purpose amplifier	SOT363	BGA2771
			SOT363	BGA2776
	RF bipolar transistor	wideband transistor	SOT363	PRF949
			SOT363	BFS17W

Function	Product		Package	Type
Buffer	RF bipolar transistor	wideband transistor	SOT343	BFG410W
			SOT343	BFG425W
			SOT343	BFG480W
			SOT23	BFR520T
			SOT416	BFR505T
			SOT323	BFS540

Function	Product		Package	Type
VCO	Varicap diodes	VCO varicap diodes	SOD523	BB141
			SOD523	BB142
			SOD523	BB143
			SOD523	BB145
			SOD523	BB145B
			SOD523	BB149

Function	Product		Package	Type
Driver	Bipolar transistor	wideband transistor	SOT343	BFG21W
			SOT343	BFG425W
			SOT343	BFG480W
	MMIC	amplifier*	SOT363	BGA2031/1
		Gen. purpose wideband ampl.	SOT363	BGA2771
			SOT363	BGA2776

Function	Product		Package	Type
Power amplifier	Bipolar transistor	wideband transistor	SOT343	BFG21W
			SOT343	BFG480W
	MMIC	amplifier *	SOT363	BGA2031/1
		Gen. purpose wideband ampl.	SOT363	BGA2771
			SOT363	BGA2776

ad* = 2 stage variable gain linear amplifier

Recommended application notes

1880MHz PA driver	BFG21W
1880MHz PA driver	BFG480W
2GHz LNA	BFG410W
2GHz LNA	BFG425W
800MHz PA driver	BFG21W
900MHz driver	BFG480W
900MHz LNA	BFG410W
900MHz LNA	BFG480W
CDMA cellular VCO	BFG425W, BFG410W, BB142
Demoboard 900MHz LNA	BGA2003
Demoboard for BGA2001	BGA2001
Demoboard for W-CDMA	BGA2003
High IP3 MMIC LNA at 1.8 - 2.4 GHz	BGA2012
High IP3 MMIC LNA at 900MHz	BGA2011
Power amplifier for 1.9GHz DECT and PHS	BFG425W, BFG21W
Rx mixer for 2450MHz	BGA2022
Ultra LNA's for 900&2000MHz with high IP3	BFG410W, BFG425W

1.2 2.4 GHz front-end for WLAN, Bluetooth™, DECT, ZigBee™, etc.

Application diagram

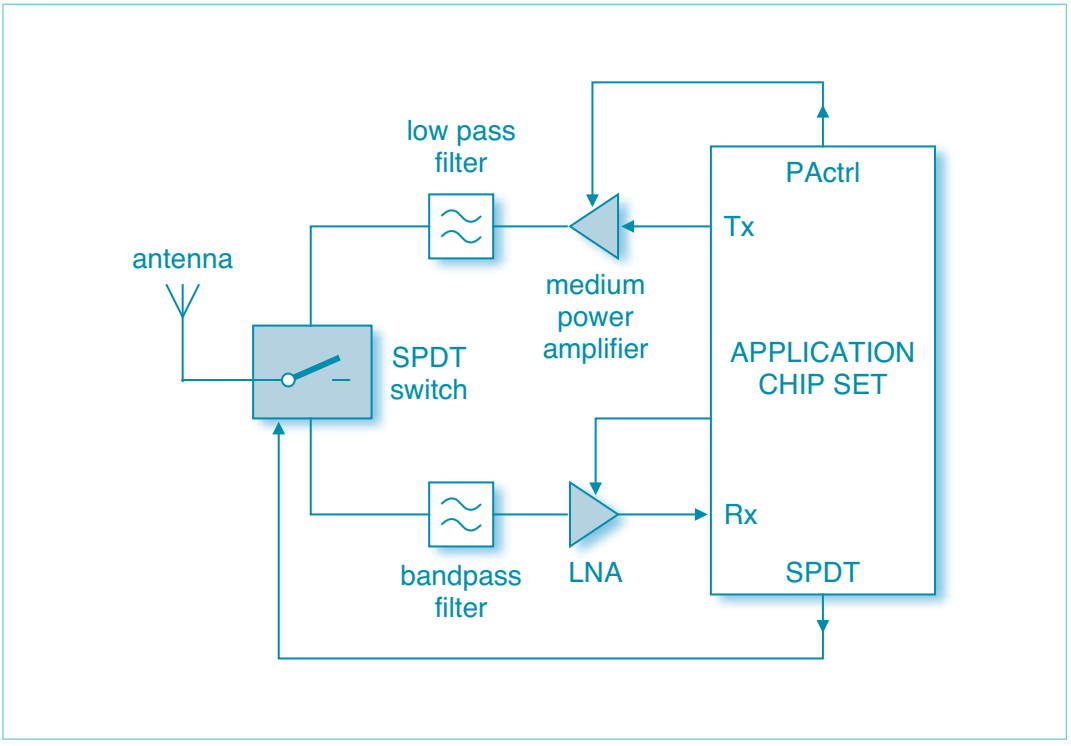

Recommended products

Function	Product		Package	Type
SPDT Switch	RF diode	Pin diode	SOD523	BAP51-02
			SOD882T	BAP51LX
			SOD882T	BAP55LX

Function	Product		Package	Type
Medium power amplifier	MMIC	Gen. purpose med. power amplifier	SOT89	BGA6589

Function	Product		Package	Type
LNA	MMIC	Low noise WB amplifier	SOT343R	BGA2003
			SOT343R	BGA2001

Recommended application notes

2.45 Ghz T/R, RF switch	BAP51-02
Low-impedance PIN diode	BAP50-05
Demoboard 900 MHz LNA	BGA2003
Demoboard for 900&1800 MHz	BGA2001
Demoboard for W-CDMA	BGA2003

1.3 Low Noise Block (LNB)

Application diagram

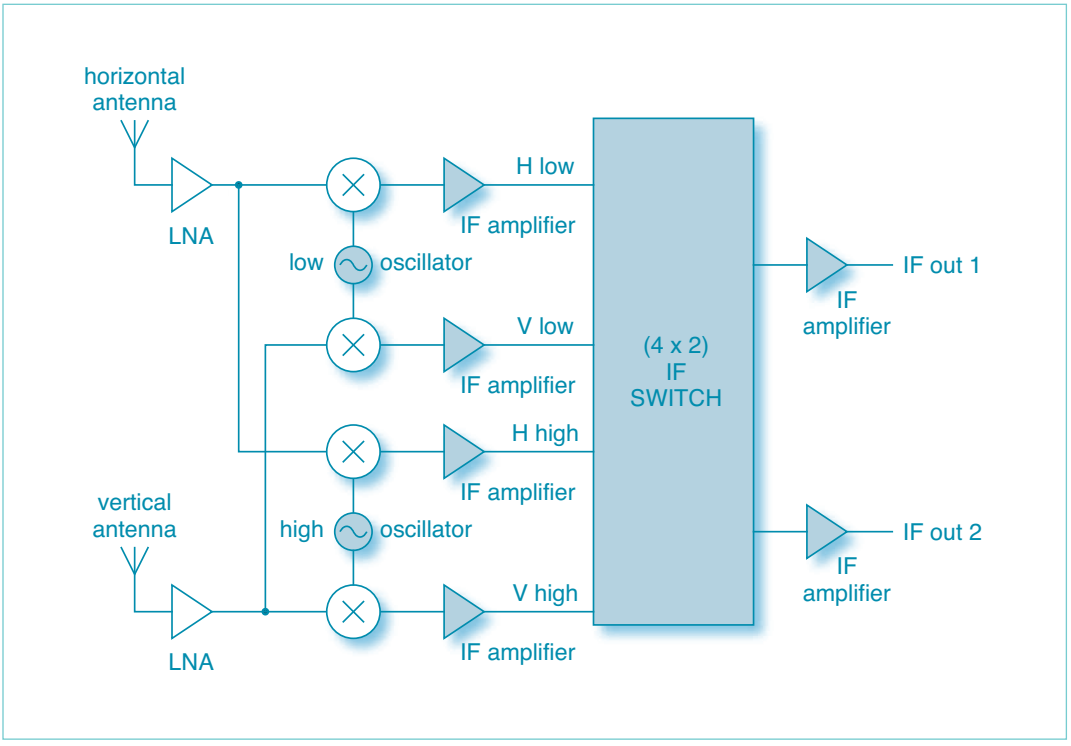

Recommended products

Function	Product		Package	Type
Oscillator	RF bipolar transistor	wideband transistor	SOT343	BFG424W
			SOT343F	BFG424F

Function	Product		Package	Type
IF switch	RF diode	PIN diode	various	BAP64
			various	BAP51
			various	BAP1321
			various	BAP50
			various	BAP63

Function	Product		Package	Type
1st stage IF amplifier	MMIC	General purpose amplifier	SOT363	BGA2711
			SOT363	BGA2712
			SOT363	BGA2748
			SOT363	BGA2715
			SOT363	BGA2717
	RF bipolar transistor	wideband transistor	SOT343	BFG424W
			SOT343F	BFG424F

Function	Product		Package	Type
Output stage IF amplifier	MMIC	Gen. purpose amplifier	SOT363	BGA2709
			SOT363	BGA2776
			SOT363	BGM1014
			SOT363	BGM1012
			SOT363	BGA2716
	RF bipolar transistor	wideband transistor	SOT343	BFG325

Recommended application notes

2.45Ghz T/R, RF Switch	BAP51-02
Low-impedance PIN diode	BAP50-05

1.4 Global Positioning System (GPS)

Application diagram

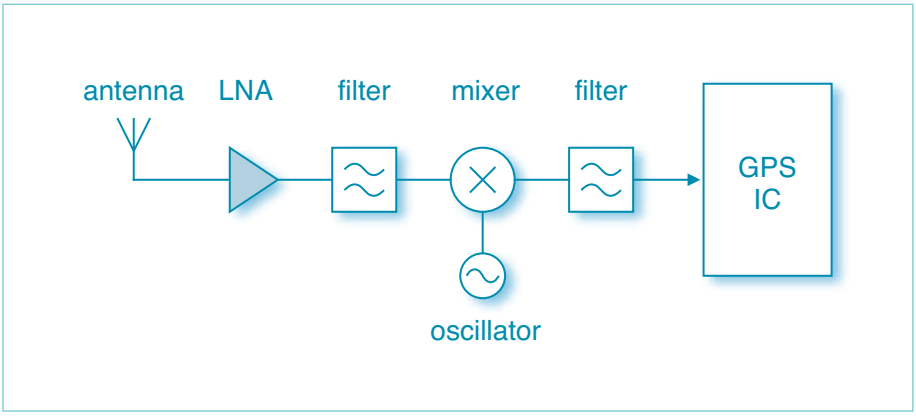

Recommended products

Function	Product		Package	Type
LNA	RF bipolar transistor	Wideband transistor	SOT343	BFG425W
			SOT343	BFG410W
	MMIC	Low noise wideband amplifier	SOT343R	BGA2001
			SOT343R	BGA2003
		General purpose wideband amplifier	SOT363	BGM1013
			SOT363	BGM1011
			SOT363	BGA2715
			SOT363	BGA2748

Recommended application notes

Introduction into the GPS front-end*	BGAx, BGMx, BGUx
900 MHz LNA	BFG410W
2 GHz LNA	BFG410W
2 GHz high IP3 LNA	BGA2003

* no web link available, published in Appendix 6th edition, see RF Manual web page

1.5 TV / VCR / DVD tuning

Application diagram

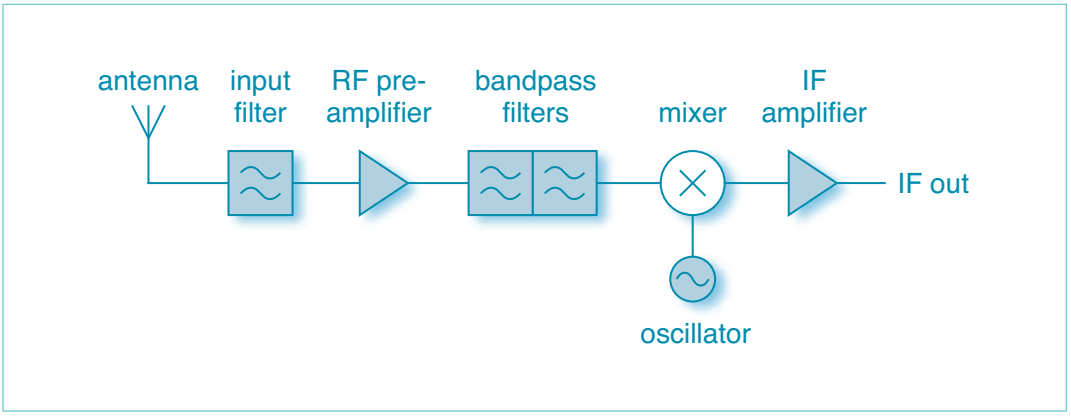

Recommended products

Function	Product		Package	Type
Input filter	Varicap diode	VHF low	SOD323	BB152
			SOD523	BB182
		VHF high	SOD323	BB153
			SOD523	BB178
			SOD523	BB187
		UHF	SOD323	BB149A
			SOD523	BB179

Function	Product		Package	Type
Bandpass filter	Varicap diode	VHF low	SOD323	BB152
			SOD523	BB182
		VHF high	SOD323	BB153
			SOD523	BB178
			SOD523	BB187
		UHF	SOD323	BB149A
			SOD523	BB179

Function	Product		Package	Type
RF pre-amplifier	Mosfet	5 V	SOT143	BF904
			SOT143	BF909
			SOT143	BF1201
			SOT143	BF1202
			SOT143	BF1105
			SOT143	BF1211
			SOT143	BF1212
		9 V	SOT143	BF1100
			SOT143	BF1109
		2-in-1.5 V	SOT363	BF1102R
			SOT363	BF1203
			SOT363	BF1204
			SOT363	BF1205
			SOT363	BF1206
			SOT363	BF1207
			SOT363	BF1208

Function	Product		Package	Type
Oscillator	Varicap diode	VHF low	SOD323	BB152
			SOD523	BB182
		VHF high	SOD323	BB153
			SOD523	BB178
			SOD523	BB187
		UHF	SOD323	BB149A
			SOD523	BB179

Function	Product		Package	Type
IF amplifier	MMIC	Wideband amplifier	SOT363	BGA2717

Recommended application notes

Application note for Mosfets: BF9x, BF110x, BF120x*	BF9x, BF110x, BF120x

* no web link available, published in Appendix 3rd edition, see RF Manual web page

1.6 Car Radio Receiver (CREST ICs: TEF6860HL, TEF6862HL)

Application diagram

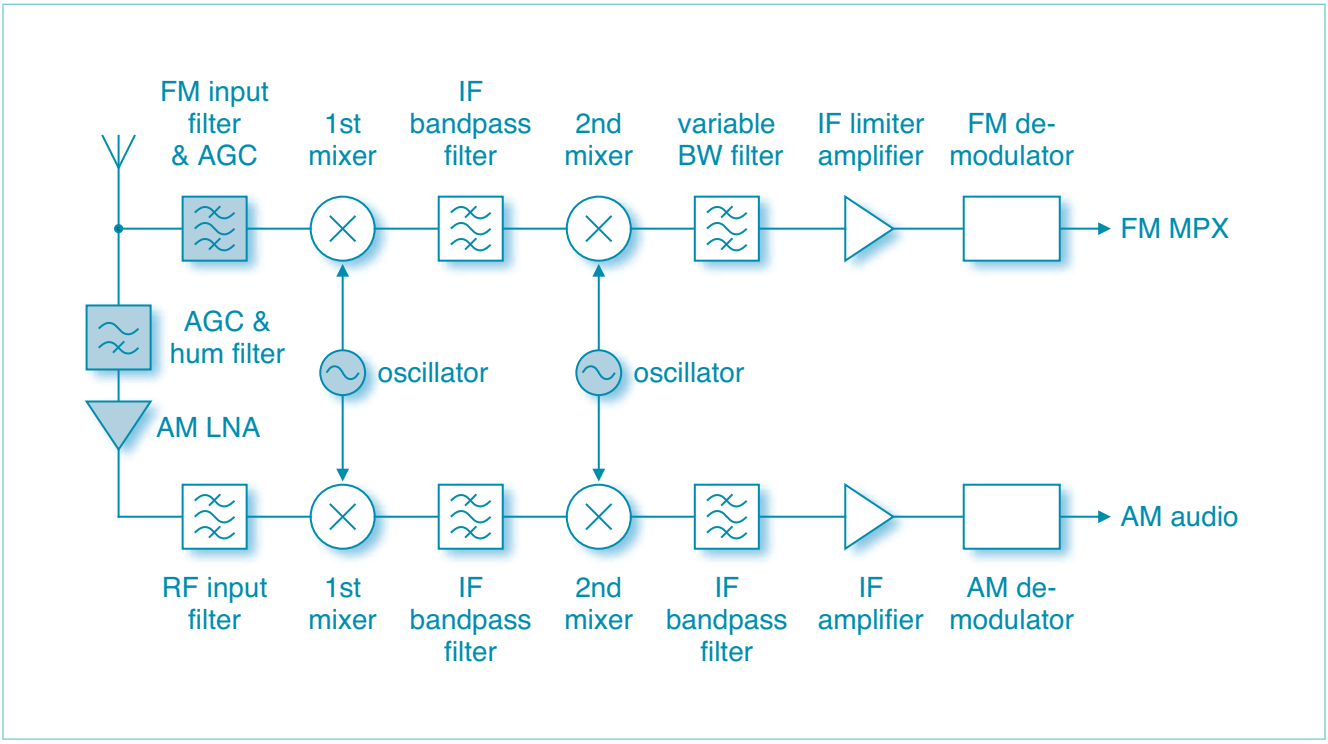

Recommended products

Function	Product		Package	Type
AM LNA	RF transistor	JFET	SOT23	BF862

Function	Product		Package	Type
FM input filter & AGC	RF diode	Varicap diode	SOT23	BB201*
			SOT23	BB207
		PIN diode	SOD523	BAP70-02
			SOD323	BAP70-03

ad* = OIRT

Function	Product		Package	Type
Oscillator	RF diode	Varicap diode	SOD323	BB156
			SOD523	BB208

Function	Product		Package	Type
AGC & hum filter	RF diode	PIN diode	SOT363	BAP70AM

Note 1: all these recommended discrete products are applicable for NICEPACS, CCC en DDICE:
NICE: TEA6840H, TEA6845H, TEA6846H, NICEPACS: TEA6848H, TEA6849H; CCC: TEF6901H, TEF6903H; DDICE: TEA6721HL.
All these recommended discrete products are applicable excluding AM LNA in: DICE2: TEF6730HWCE ICs: TEF6848H, TEF6849H).

Note 2: Phone and portable radio (IC: TEA5757) use varicap BB200 as FM oscillator.
Phone and portable radio (IC: TEA5767/68) use varicap BB202 as FM oscillator.

Recommended application notes

Low-voltage FM stereo radio (TEA5767/68)*	BB202
A NICE radio (TEA6848H) - Draft**	JFETS, Varicaps and PIN diodes
Integrated Car Radio CCC (TEF69xxx) - Draft**	JFETS, Varicaps and PIN diodes

* no web link available, published in Appendix 3rd edition, see RF Manual web page
** no web link available, ask your Philips sales representative

1.7 CATV Electrical (Line Extenders)

Application diagram

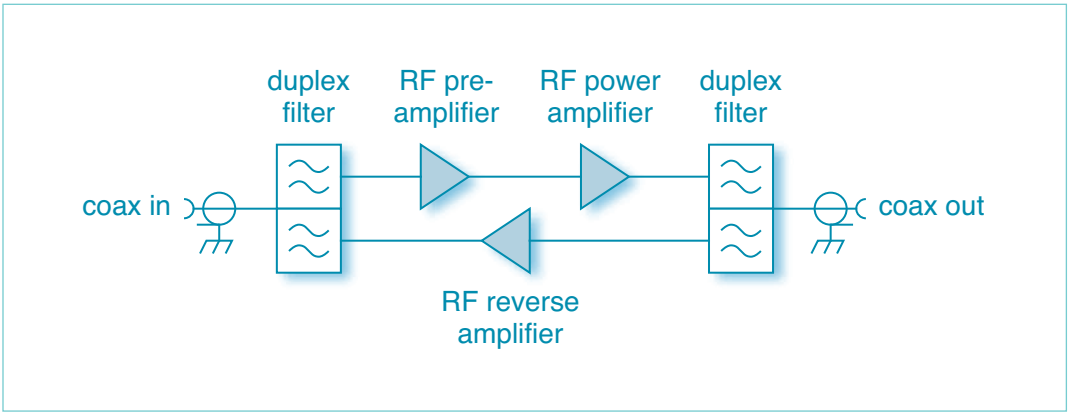

Recommended products

Function	Product	Frequency	Gain (dB)	Type
RF Pre Amplifier	Push-Pulls	550Mhz	33.5 - 35.5	BGY588N
			33.5 - 35.5	BGY588C
			26.2 - 27.8	BGY587B
		600Mhz	21 - 22	BGY687
		750Mhz	33.5 - 35.2	BGE788C
			33.5 - 34.5	BGE788
			18 - 19	BGY785A
			21 - 22	BGY787
		860Mhz	18 - 19	BGY885A
			21 - 22	BGY887
			33.5 - 34.5	BGY888
			25.2 - 25.8	CGY887A
		1000Mhz	18-19	BGY1085A

Function	Product	Frequency	Gain (dB)	Type
RF Power Amplifier	Power Doublers	550Mhz	18-19	BGD502
		750Mhz	19.5 - 20.5	BGD704
			18.2 - 18.8	BGD712
			18.2 - 18.8	BGD712C
			20 - 20.6	BGD714
		860Mhz	18 -19	BGD802
			18.2 18.8	BGD812
			19.7 20.3	BGD814
			18.2 -18.8	BGD902
			19.7 -20.3	BGD904
			21.2 - 21.8	BGD906
			19.75 - 20.25	CGD914
			19.25 - 19.75	CGD923

Function	Product	Frequency	Gain (dB)	Type
RF Reverse Amplifier	Reverse Hybrids	5-75 MHz	29.2 - 30.8	BGY68
		5-120 MHz	24.5 - 25.5	BGY66B
		5-200 MHz	23.5 - 24.5	BGY67A

*) All available in SOT115 package

Recommended application notes

BGS67A high-dynamic-range hybrid ampl. reverse ampl. 2-way CATV systems	BGS67A
A hybrid wideband amplifier module for digital CATV networks with BGD902	BGD902

1.8 CATV Optical (Optical Nodes)

Application diagram

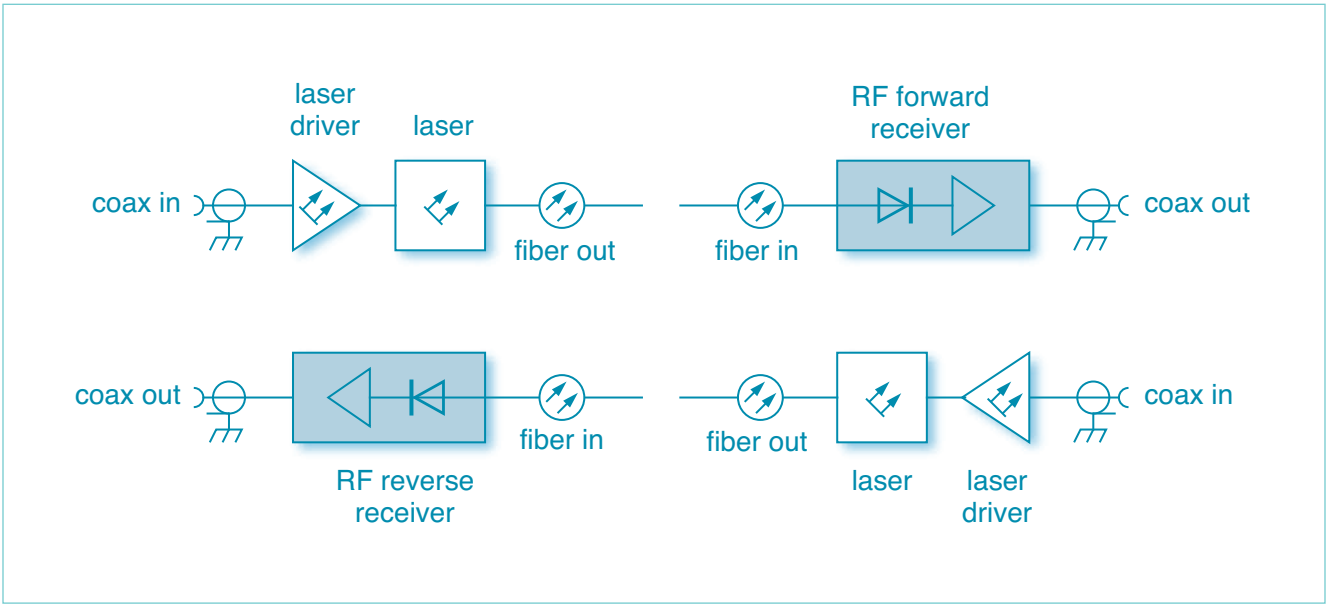

Recommended products

Function	Product	Frequency	Package	Type
RF Reverse Receiver	Optical Reverse Receiver	300 MHz	SOT115	BGO387

Function	Product	Frequency	Package	Type
RF Forward Receiver	Forward Path Receiver	750Mhz	SOT115	BGO747
		860Mhz	SOT115	BGO807
			SOT115	BGO827
			SOT115	BGO847

Recommended application notes

Using a Philips Optical Receiver in CATV applications	All Optical Receivers

1.9 Optical Networking (SFF/SFP modules)

Application diagram

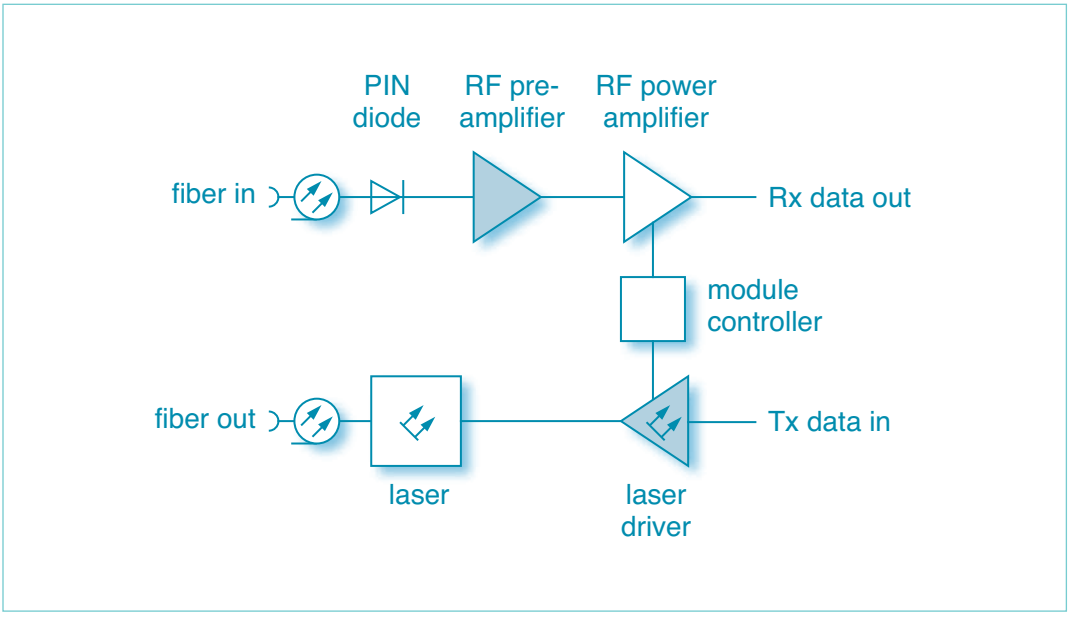

Recommended products

Function	Product	Data rate (Mb/s)	Package	Type
RF Pre Amplifier	Transimpedance Amplifier	155	die only	TZA3036
		622	die only	TZA3026
		1200	die only	TZA3046
		2488	die only	TZA3013

Function	Product	Data rate (Mb/s)	Package	Type
Laser driver	Laser driver	1250	SOT560-01	TZA3047B
			SOT560-01	TZA3050
		3200	SOT560-01	TZA3010B
			SOT560-01	TZA3011B

Recommended application notes

OM5811 demo boards supporting TZA3010/11/47 laser drivers for 30-3200 Mb/s	TZA3010/11/47
TZA30x6 – Receiver Optical Sub-Assembly*	TZA30x6

* No web link available of this application note.
Please ask your Philips sales representative for assistance.

2. Product portfolio

Philips product selector:
http://www.semiconductors.philips.com/products/selector/27046/index.html

Philips RF discretes catalogue:
http://www.semiconductors.philips.com/cgi-bin/catalog/catalog.pl/mms/219/282/^27046/

2.1 New products

Type	Application / Description	Product status 1 Nov. 05	Plan Release	Info
NEW: RF diodes				
BB202LX	Varicap for mobile radio in cellulars, MCD in 1006 leadless package	CQS	Q1 2006	Chapter 2.2.1 Varicap diodes
BB178LX	Varicap for TV & Satellite in 1006 leadless package	CQS	Q1 2006	
BB179BLX	Varicap for TV & Satellite in 1006 leadless package	CQS	Q1 2006	
BB179LX	Varicap for TV & Satellite in 1006 leadless package	CQS	Q1 2006	
BB181LX	Varicap for TV & Satellite in 1006 leadless package	CQS	Q1 2006	
BB182LX	Varicap for TV & Satellite in 1006 leadless package	CQS	Q1 2006	
BB184LX	Low voltage varicap for TV & Satellite UHF in 1006 leadless package	DEV	Q2 2006	
BB185LX	Low voltage varicap for TV & Satellite VHF in 1006 leadless package	DEV	Q2 2006	
BB187LX	Varicap for TV & Satellite in 1006 leadless package	CQS	Q1 2006	
BB198	Varicap for VCO, VCXO, TCXO	CQS	Q4 2005	
BB199	Varicap for VCO, VCXO, TCXO	CQS	Q4 2005	
BB140LX	Varicap for VCO, VCXO, TCXO in 1006 leadless package	CQS	Q3 2005	
BB143LX	Varicap for VCO, VCXO, TCXO in 1006 leadless package	DEV	Q2 2006	
BB404LX	Double BB202 for VCO and FM radio tuning in 1006 leadless package	DEV	Q3 2006	Chapter 2.2.2 Pin diodes
BAP51LX	Cellular phone, Bluetooth, Cordless phone -RF switch & FE module in 1006 leadless package	CQS	Q1 2006	
BAP55LX	Cellular phone, Bluetooth, Cordless phone -RF switch & FE module in 1006 leadless package	DEV	Q1 2006	
BAP70AM	Car Radio AM	CQS	Q4 2005	
NEW: RF bipolar transistor				
BFG424F	Satellite LNB - High frequency oscillators for DRO (Dielectric resonant oscillator)	RFS	Q1 2005	Chapter 2.3.1 Wideband trs
BFG424W	Satellite LNB - High frequency oscillators for DRO (Dielectric resonant oscillator)	RFS	Q1 2005	
NEW: RF MOS transistors				
BF1206F	Twin MOSFET with two LNAs for TV/VCR/DVD/STB/SAT	RFS	Q4 2005	Chapter 2.5.3 MOSFETs
BF1207	Twin MOSFET with improved VHF cross modulation for TV/VCR/DVD/STB/SAT	RFS	Q2 2005	
NEW: RF modules				
BGY588C	Push Pull, 550 MHz, 34.5 dB, SOT115	RFS	Q3 2005	Chapter 2.6.2 CATV push pulls
BGE788C	Push Pull, 750 MHz, 34 dB, SOT115	RFS	Q3 2005	
OM7650	550 MHz, 34.5 dB gain Push-Pull, SOT115	CQS	Q4 2005	
OM7670	750 MHz, 34 dB gain Push-Pull, SOT115	CQS	Q4 2005	
BGD712C	750 MHz, 18.5 dB gain Power Doubler,SOT115	CQS	Q4 2005	Chapter 2.6.3 CATV power doublers
CGD942C	870 MHz, 22 dB gain Power Doubler, SOT115	CQS	Q1 2006	
CGD944C	870 MHz, 24 dB gain Power Doubler, SOT115	CQS	Q1 2006	
CGD1042	1 GHz, 23 dB, GaAs, SOT115	CQS	Q1 2006	
CGD1044	1 GHz, 23 dB, GaAs, SOT115	CQS	Q1 2006	
BGO807C	870 MHz Optical Receiver	CQS	Q4 2005	Chapter 2.6.4 CATV Optical Receivers
NEW: Fibre-optic tranceivers ICs				
TZA3036	Transimpedance Amplifier Datarate 0-155	RFS	Q2 2005	Chapter 2.7.2 Transimpedance amplifiers
TZA3026	Transimpedance Amplifier Datarate 0-622	RFS	Q1 2005	
TZA3046	Transimpedance Amplifier Datarate 0-1250	CQS	Q3 2005	

2.2 RF diodes

Philips varicaps:
http://www.semiconductors.philips.com/markets/mms/products/discretes/featured_products/rf_varicaps/

Philips RF PIN diodes:
http://www.semiconductors.philips.com/markets/mms/products/discretes/key_solutions/multimarket/diodes/PIN_diodes/index.html

Philips RF Schottky diodes:
http://www.semiconductors.philips.com/markets/mms/products/discretes/key_solutions/multimarket/diodes/low_cd_schottky/index.html

2.2.1 Varicap diodes

Varicaps diodes line-up per frequency

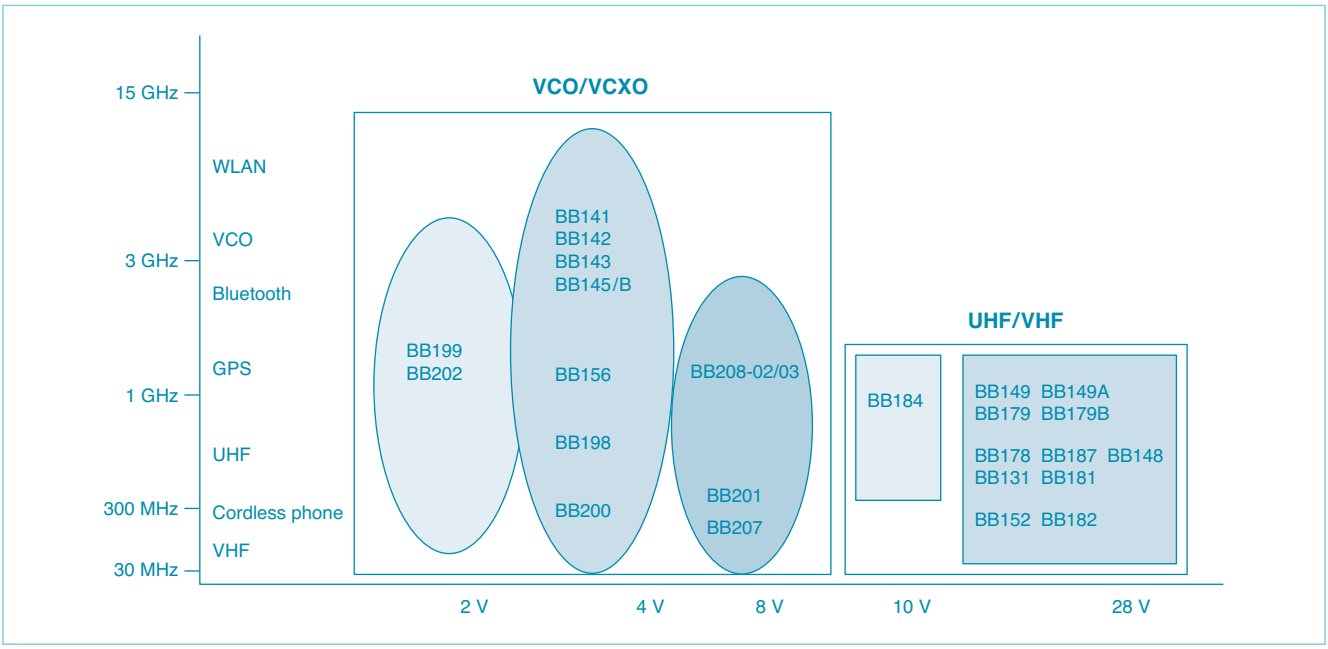

VCO varicap diodes

Type	Package	Cd @ Vr (pF)			Cd @ Vr (pF)			TUNING RANGE Cd over voltage range (V)			rs (Ω)
		min	max	(V)	min	max	(V)	ratio	V1 to V2		typ.
BB140LX***	SOD882	2.48	2.69	1	1.27	1.38	3	1.88 - 2.04	1	3	1.2
BB141	SOD523	3.9	4.5	1	2.22	2.55	4	1.76	1	4	0.4
BB142	SOD523	4	4.9	1	1.85	2.35	4	2.2	1	4	0.5
BB143	SOD523	4.75	5.75	1	2.05	2.55	4	2.35	1	4	0.5
BB143LX	SOD882T	4.75	5.75	1	2.05	2.55	4	2.35	1	4	0.5
BB145	SOD523	6.4	7.4	1	2.75	3.25	4	2	1	4	0.6
BB145B	SOD523	6.4	7.4	1	2.55	2.95	4	.2.2	1	4	0.6
BB202**	SOD523	28.2	33.5	0.2	7.2	11.2	2.3	2.5	0.2	2.3	0.35
BB202LX**	SOD882T	28	33.5	0.2	7.2	11.2	2.3	2.5	0.2	2.3	0.4
BB156	SOD323	14.4	17.6	1	7.6	9.6	4	1.86	1	4	0.4
BB198	SOD523	25	28.5	1	4.8	6.8	4	-	-	-	0.8 max
BB199	SOD523	36.5	42.5	0.5	11.8	13.8	2	-	-	-	0.25
BB208-02*	SOD523	19.9	23.2	1	4.5	5.4	7.5	4.3	1	7.5	0.35
BB208-03*	SOD323	19.9	23.2	1	4.5	5.4	7.5	4.3	1	7.5	0.35

= New
ad* = including special design for FM car radio (CREST-IC: TEF6860)
ad** = including special design for mobile phone tuner ICs
ad*** = Not yet released, samples available

Radio varicap diodes: FM radio tuning

Type	Package	Cd @ Vr (pF)			Cd @ Vr (pF)			TUNING RANGE Cd over voltage range (V)			rs (Ω)
		min	max	(V)	min	max	(V)	ratio (min)	V1 to V2		typ.
BB804	SOT23	42	46.5	2	26 typ.		8	1.75	2	8	0.2
BB200	SOT23	65.8	74.2	1	12	14.8	4.5	5	1	4.5	0.43
BB201	SOT23	89	102	1	25.5	29.7	7.5	3.1	1	7.5	0.3
BB202**	SOD523	28.2	33.5	0.2	7.2	11.2	2.3	2.5	0.2	2.3	0.35
BB202LX**	SOD882T	28	33.5	0.2	7.2	11.2	2.3	2.5	0.2	2.3	0.4
BB156	SOD323	14.4	17.6	1	7.6	9.6	4	3.3	1	7.5	0.4
BB207*	SOT23	76	86	1	25.5	29.7	7.5	2.6	1	7.5	0.2

= New
ad* = including special design for FM car radio (CREST-IC: TEF6860)
ad** = including special design for mobile phone tuner ICs

TV & satellite varicap diodes - UHF tuning

Type	Package	Cd @ Vr (pF)			TUNING RANGE Cd over voltage range (V)			rs (Ω)	MATCHED SETS	TYPICAL APPLICATIONS			
		min	max	(V)	ratio	V1 to V2		max	%	TV	VCO	SAT.	STB
Matched													
BB149	SOD323	1.90	2.25	28	9.0	1	28	0.75	1.0	X	-	-	X
BB149A	SOD323	1.95	2.22	28	9.7	1	28	0.75	2.0	X	-	-	X
BB179	SOD523	1.95	2.22	28	9.7	1	28	0.75	2.0	X	X	-	X
BB179LX	SOD882T	1.95	2.22	28	9.7	1	28	0.75	2.0	X	X	-	X
BB179B	SOD523	1.90	2.25	28	9.2	1	28	0.75	2.0	X	-	-	X
BB179BLX	SOD882T	1.90	2.25	28	9.2	1	28	0.75	2.0	X	-	-	X
BB184	SOD523	1.87	2.13	10	6	1	10	0.65 typ.	2	X	X	-	-
BB184LX	SOD882T	1.87	2.13	10	6	1	10	0.65 typ.	2	X	X	-	-
Unmatched													
BB135	SOD323	1.70	2.10	28	10.0	0.5	28	0.75	-	X	X	-	-
BBY31	SOT23	1.60	2.00	28	8.3	1	28	1.20	-	X	-	-	X
BBY39	SOT23												
BBY62	SOT143												

= New

TV & satellite varicap diodes - VHF tuning

Type	Package	Cd @ Vr (pF)			TUNING RANGE Cd over voltage range (V)			rs (Ω)	MATCHED SETS	TYPICAL APPLICATIONS			
		min	max	(V)	ratio	V1 to V2		max	%	TV	VCO	SAT.	STB
Matched													
BB148	SOD323	2.4	2.75	28	15	1	28	0.9	1	X	-	-	X
BB152	SOD323	2.48	2.89	28	>20.6	1	28	1.2	2	X	-	-	X
BB153	SOD323	2.36	2.75	28	>13.5	1	28	0.8	2	X	-	-	X
BB178	SOD523	2.36	2.75	28	>13.5	1	28	0.8	2	X	-	-	X
BB178LX	SOD882T	2.36	2.75	28	>13.5	1	28	0.8	2	X	-	-	X
BB182	SOD523	2.48	2.89	28	>20.6	1	28	1.2	2	X	-	-	X
BB182LX	SOD882T	2.48	2.89	28	>20.6	1	28	1.2	2	X	-	-	X
BB187	SOD523	2.57	2.92	25	11	2	25	0.75	2	X	-	-	X
BB187LX	SOD882T	2.57	2.92	25	11	2	25	0.9	2	X	-	-	X
Unmatched													
BB131	SOD323	0.7	1.055	28	14	0.5	28	3	-	X	-	X	X
BB181	SOD523	0.7	1.055	28	14	0.5	28	3	-	X	-	X	X
BB181LX	SOD882T	0.7	1.055	28	14	0.5	28	3	-	X	-	X	X
BBY40	SOT23	4.3	6.00	25	5.5	3	25	0.7	-	X	-	-	X

= New

2.2.2 PIN diodes

PIN diodes

Type	Package	Conf	Limits		RD (W) typ @			Cd (pF) type @		
			Vr(V)	If(mA)	0.5mA	1 mA	10 mA	0V	1V	20V
BAP50-02	SOD523	S	50	50	25	14	3	0.4	0.3	0.22 @ 5V
BAP50-03	SOD323	S	50	50	25	14	3	0.4	0.3	0.2 @ 5V
BAP50-04	SOT23	SS	50	50	25	14	3	0.45	0.35	0.3 @ 5V
BAP50-04W	SOT323	SS	50	50	25	14	3	0.45	0.35	0.3 @ 5V
BAP50-05	SOT23	CC	50	50	25	14	3	0.45	0.35	0.3 @ 5V
BAP50-05W	SOT323	CC	50	50	25	14	3	0.45	0.35	0.3 @ 5V
BAP51LX	SOD882T	S	60	60	5.5	3.6	1.5	0.4	0.3	0.2 @ 5V
BAP51-02	SOD523	S	60	60	5.5	3.6	1.5	0.4	0.3	0.2 @ 5V
BAP51-03	SOD323	S	60	60	5.5	3.6	1.5	0.4	0.3	0.2 @ 5V
BAP51-04W	SOT323	SS	50	50	5.5	3.6	1.5	0.4	0.3	0.2 @ 5V
BAP51-05W	SOT323	CC	60	60	5.5	3.6	1.5	0.4	0.3	0.2 @ 5V
BAP51-06W	SOT323	CA	50	50	5.5	3.6	2	0.4	0.3	0.2 @ 5V
BAP55LX	SOD882T	S	50	100	3.4	2.3	1	0.27	0.23	0.18 @ 5V
BAP63-02	SOD523	S	50	100	2.5	1.95	1.17	0.36	0.32	0.25
BAP63-03	SOD323	S	50	100	2.5	1.95	1.17	0.4	0.35	0.27
BAP63-05W	SOT323	CC	50	100	2.5	1.95	1.17	0.4	0.35	0.3
BAP64-02	SOD523	S	200	175	20	10	2	0.52	0.37	0.23
BAP64-03	SOD323	S	200	175	20	10	2	0.52	0.37	0.23
BAP64-04	SOT23	SS	200	175	20	10	2	0.52	0.37	0.23
BAP64-04W	SOT323	SS	200	100	20	10	2	0.52	0.37	0.23
BAP64-05	SOT23	CC	200	175	20	10	2	0.52	0.37	0.23
BAP64-05W	SOT323	CC	200	100	20	10	2	0.52	0.37	0.23
BAP64-06	SOT23	CA	200	175	20	10	2	0.52	0.37	0.23
BAP64-06W	SOT323	CA	100	100	20	10	2	0.52	0.37	0.23
BAP65-02	SOD523	S	30	100	-	1	0.56	0.65	0.6	0.375
BAP65-03	SOD323	S	30	100	-	1	0.56	0.65	0.6	0.375
BAP65-05	SOT23	CC	30	100	-	1	0.56	0.65	0.6	0.375
BAP65-05W	SOT323	CC	30	100	-	1	0.56	0.65	0.6	0.375
BAP70AM	SOT363	SS	50	100	77	40	5.4	0.57	0.4	0.2
BAP70-02	SOD523	S	50	100	77	40	5.4	0.57	0.4	0.2
BAP70-03	SOD323	S	50	100	77	40	5.4	0.57	0.4	0.2
BAP70-04W	SOT323	SS	50	100	77	40	5.4	0.57	0.4	0.2
BAP70-05	SOT23	CC	50	100	77	40	5.4	0.57	0.4	0.2
BAP1321-02	SOD523	S	60	100	3.4	2.4	1.2	0.4	0.35	0.25
BAP1321-03	SOD323	S	60	100	3.4	2.4	1.2	0.4	0.35	0.25
BAP1321-04	SOT23	SS	60	100	3.4	2.4	1.2	0.4	0.35	0.25

= New
S = Single
SS = Series
CC = Common Cathode
CA = Common Anode

2.2.3 Band-switch diodes

Type	Package	MAXIMUM RATINGS		CHARACTERISTICS ; maximals					
		VR(V)	IF(mA)	Rd@IF and f			Cd @VR and f		
				_	(mA)	(MHz)	(pF)	(V)	(MHz)
BA277	SOD523	35	100	0.7	2	100	1.2	6	1
BA278	SOD523	35	100	0.7	2	100	1.2	6	1
BA891	SOD523	35	100	0.7	3	100	0.9	3	1
BA591	SOD323	35	100	0.7	3	100	0.9	3	1
BA792	SOD110	35	100	0.7	3	200	1.1	3	1 to 100
BAT18	SOT23	35	100	0.7	5	200	1.0	20	1

2.2.4 Schottky diodes

Features:

- (Very) low diode capacitance
- (Very) low forward voltage
- Single and triple-isolated diode
- (Ultra / very) small package

Applications:

- Digital applications:
  - ultra high-speed switching
  - clamping circuits
- RF applications:
  - diode ring mixer
  - RF detector
  - RF voltage doubler

Low-capacitance Schottky diodes

Type	Package	VR max. (V)	IF max. (mA)	VF max. (mV)	CD max. (pF)
BAT17	SOT23	4	30	450 @ IF = 1 mA	1 @ VR = 0 V
PMBD353	SOT23	4	30	450 @ IF = 1 mA	1 @ VR = 0 V
PMBD354	SOT23	4	30	450 @ IF = 1 mA	1 @ VR = 0 V
1PS76SB17	SOD323	4	30	450 @ IF = 1 mA	1 @ VR = 0 V
1PS66SB17	SOT666	4	30	450 @ IF = 1 mA	1 @ VR = 0 V
1PS79SB17	SOD523	4	30	450 @ IF = 1 mA	1 @ VR = 0 V
1PS66SB63	SOT666	5	20	250 @ IF = 1 mA	0.5 @ VR = 0 V
1PS79SB63	SOD523	5	20	250 @ IF = 1 mA	0.5 @ VR = 0 V
1PS10SB63	SOD882	5	20	250 @ IF = 1 mA	0.5 @ VR = 0 V
1PS88SB82	SOT363	15	30	340 @ IF = 1 mA	1 @ VR = 0 V
1PS70SB82	SOT323	15	30	340 @ IF = 1 mA	1 @ VR = 0 V
1PS70SB84	SOT323	15	30	340 @ IF = 1 mA	1 @ VR = 0 V
1PS70SB85	SOT323	15	30	340 @ IF = 1 mA	1 @ VR = 0 V
1PS70SB86	SOT323	15	30	340 @ IF = 1 mA	1 @ VR = 0 V
1PS66SB82	SOT666	15	30	340 @ IF = 1 mA	1 @ VR = 0 V
1PS10SB82	SOD882	15	30	340 @ IF = 1 mA	1 @ VR = 0 V
1PS76SB62	SOD323	40	20	800 @ IF = 2 mA	0.6 @ VR = 0 V
1PS66SB62	SOT666	40	20	800 @ IF = 2 mA	0.6 @ VR = 0 V
1PS79SB62	SOD523	40	20	800 @ IF = 2 mA	0.6 @ VR = 0 V
1PS10SB62	SOD882	40	20	800 @ IF = 2 mA	0.6 @ VR = 0 V

2.3 RF Bipolar transistors

2.3.1 Wideband transistors

RF wideband transistors:
http://www.semiconductors.philips.com/markets/mms/products/discretes/key_solutions/multimarket/transistors/25_45ghz_wideband/index.html

Wideband transistors

The fT-IC curve represents Transition Frequency (fT) characteristics as a function of collector current (IC) for the six generations of RF wideband transistors. A group of transistors having the same collector current (IC) & similar transition frequencies (fT) represents a curve. The curve number matches products in the table, detailing their RF characteristics.

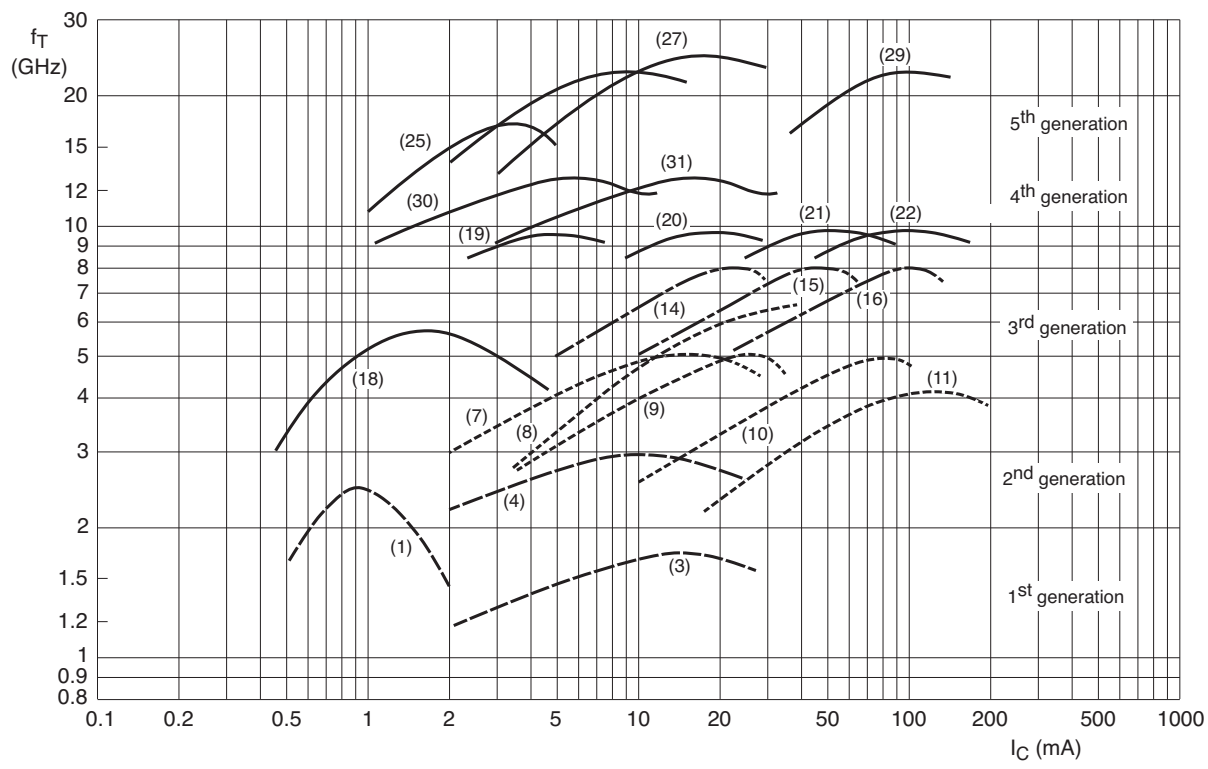

Wideband transistors (RF small signal)

Type	Curve	Package	F_t (GHz)	V_{ceo} (V)	I_c (mA)	P_{tot} (mW)	Polarity	Gum (dB)	F (dB)	@ (MHz)	Gum (dB)	F (dB)	@ (MHz)	Vo (mV)	PI (dBm)	ITO (dBm)	@ Ic & (mA)	Vce (V)
			Typical	Maximum values														
BFG10(X)	-	SOT143	-	8	250	250	NPN	-	-	-	7	-	1900	-	-	-	-	-
BFG10W/X	-	SOT343	-	10	250	400	NPN	-	-	-	7	-	1900	-	-	-	-	-
BLT80	-	SOT223	-	10	250	2000	NPN	>6	-	900	-	-	-	-	-	-	-	-
BLT81	-	SOT223	-	9.5	500	2000	NPN	>6.5	-	900	-	-	-	-	-	-	-	-
BLT50	-	SOT223	-	10	500	2000	NPN	>7	-	900	-	-	-	-	-	-	-	-
BLT70	-	SOT223	-	8	250	2100	NPN	>6	-	900	-	-	-	-	-	-	-	-
PMBHT10	-	SOT23	0.65	25	40	400	NPN	-	-	-	-	-	-	-	-	-	-	-
BFS17	3	SOT23	1	15	25	300	NPN	-	4.5	500	-	-	-	-	-	-	-	-
BFS17W	3	SOT323	1.6	15	50	300	NPN	-	4.5	500	-	-	-	-	-	-	-	-
BFT25	1	SOT23	2.3	5	6.5	30	NPN	18	3.8	500	12	-	800	-	-	-	-	-
BFS17A	4	SOT23	2.8	15	25	300	NPN	13.5	2.5	800	-	-	-	150	-	-	14	10
BFG35	11	SOT223	4	18	150	1000	NPN	15	-	500	11	-	800	750	-	-	100	10
BFQ18	11	SOT89	4	18	150	1000	NPN	-	-	-	-	-	-	-	-	-	-	-

= New

Wideband transistors (RF small signal)

Type	Curve	Package	F_t (GHz) Typical	V_{ceo} (V) Maximum values	I_c (mA) Maximum values	P_{tot} (mW) Maximum values	Polarity	Gum (dB)	F (dB)	@ (MHz)	Gum (dB)	F (dB)	@ (MHz)	Vo (mV)	PI (dBm)	ITO (dBm)	@ Ic & (mA)	Vce (V)
BFG25A/X	18	SOT143	5	5	6.5	32	NPN	18	1.8	1000	-	-	-	-	-	-	-	-
BFG25W(/X)	18	SOT343	5	5	6.5	500	NPN	16	2	1000	8	-	2000	-	-	-	-	-
BFG31	10	SOT223	5	15	100	1000	PNP	16	-	500	12	-	800	550	-	-	70	10
BFG590(/X)	22	SOT143	5	15	200	400	NPN	13	-	900	7.5	-	2000	-	-	-	-	-
BFG590W/X	22	SOT343	5	15	200	500	NPN	13	-	900	7.5	-	2000	-	21	-	80	5
BFG92A(/X)	7	SOT143	5	15	25	400	NPN	16	2	1000	11	3	2000	-	-	-	-	-
BFQ149	10	SOT89	5	15	100	1000	PNP	12	3.75	500	-	-	-	-	-	-	-	-
BFR106	10	SOT23	5	15	100	500	NPN	11.5	3.5	800	-	-	-	350	-	-	50	9
BFR92A	7	SOT23	5	15	25	300	NPN	14	2.1	1000	8	3	2000	150	-	-	14	10
BFR92AW	7	SOT323	5	15	25	300	NPN	14	2	1000	-	3	2000	-	-	-	-	-
BFR93AW	8	SOT323	5	12	35	300	NPN	13	1.5	1000	8	2.1	2000	-	-	-	-	-
BFS25A	18	SOT323	5	5	6.5	32	NPN	13	1.8	1000	-	-	-	-	-	-	-	-
BFT25A	18	SOT23	5	5	6.5	32	NPN	15	1.8	1000	-	-	-	-	-	-	-	-
BFT92	7	SOT23	5	15	25	300	PNP	18	2.5	500	-	-	-	150	-	-	14	10
BFT92W	7	SOT323	5	15	35	300	PNP	17	2.5	500	11	3	1000	-	-	-	-	-
BFT93	9	SOT23	5	12	35	300	PNP	16.5	2.4	500	-	-	-	300	-	-	30	5
BFT93W	9	SOT323	5	12	50	300	PNP	15.5	2.4	500	10	3	1000	-	-	-	-	-
BFG97	10	SOT223	5.5	15	100	1000	NPN	16	-	500	12	-	800	700	-	-	70	10
BFQ19	10	SOT89	5.5	15	100	1000	NPN	11.5	3.3	500	7.5	-	800	-	-	-	-	-
BFG93A(/X)	8	SOT143	6	12	35	300	NPN	16	1.7	1000	10	2.3	2000	-	-	-	-	-
BFG94	8	SOT223	6	12	60	700	NPN	-	2.7	500	13.5	3	1000	500	21.5	34	45	10
BFR93A	8	SOT23	6	12	35	300	NPN	13	1.9	1000	-	3	2000	425	-	-	30	8
BFG135	16	SOT223	7	15	150	1000	NPN	16	-	500	12	-	800	850	-	-	100	10
BFG591	22	SOT223	7	15	200	2000	NPN	13	-	900	7.5	-	2000	-	-	-	-	-
BFQ591	22	SOT89	7	15	200	2000	NPN	13	-	900	7.5	-	2000	-	-	-	-	-
BFG198	15	SOT223	8	10	100	1000	NPN	18	-	500	15	-	800	700	-	-	70	8
BFG67(/X)	14	SOT143	8	10	50	380	NPN	17	1.7	1000	10	2.5	2000	-	-	-	-	-
BFQ67	14	SOT23	8	10	50	300	NPN	14	1.7	1000	8	2.7	2000	-	-	-	-	-
BFQ67W	14	SOT323	8	10	50	300	NPN	13	2	1000	8	2.7	2000	-	-	-	-	-
PBR941	-	SOT23	8	10	50	360	NPN	15	1.4	1000	9.5	2	2000	-	-	-	-	-
PBR951	-	SOT23	8	10	100	365	NPN	14	1.3	1000	8	2	2000	-	-	-	-	-
PRF947	-	SOT323	8.5	10	50	250	NPN	16	1.5	1000	10	2.1	2000	-	-	-	-	-
PRF957	-	SOT323	8.5	10	100	270	NPN	15	1.3	1000	9.2	1.8	2000	-	-	-	-	-
BFG505(/X)	19	SOT143	9	15	18	150	NPN	20	1.6	900	13	1.9	2000	-	4	10	5	6
BFG520(/X)	20	SOT143	9	15	70	300	NPN	19	1.6	900	13	1.9	2000	275	17	26	20	6
BFG520W(/X)	20	SOT343	9	15	70	500	NPN	17	1.6	900	11	1.85	2000	275	17	26	20	6
BFG540(/X)	21	SOT143	9	15	120	500	NPN	18	1.9	900	11	2.1	2000	500	21	34	40	8
BFG540W(/X)	21	SOT343	9	15	120	500	NPN	16	1.9	900	10	2.1	2000	500	21	34	40	8
BFG541	21	SOT223	9	15	120	650	NPN	15	1.9	900	9	2.1	2000	500	21	34	40	8
BFM505	19	SOT363	9	8	18	500	NPN	17	1.4	900	10	1.9	2000	-	-	-	-	-
BFM520	20	SOT363	9	8	70	1000	NPN	15	1.7	900	9	1.9	2000	-	-	-	-	-
BFQ540	21	SOT89	9	12	120	1200	NPN	-	1.9	900	-	-	-	500	-	-	40	8
BFR505	19	SOT23	9	15	18	150	NPN	17	1.6	900	10	1.9	2000	-	4	10	5	6
BFR505T	19	SOT416	9	-	18	150	NPN	17	1.2	900	-	-	-	-	-	-	-	-
BFR520	20	SOT23	9	15	70	300	NPN	15	1.6	900	9	1.9	2000	-	17	26	20	6
BFR520T	20	SOT416	9	-	70	150	NPN	15	1.6	900	9	1.9	2000	-	17	26	-	-
BFR540	21	SOT23	9	15	120	500	NPN	14	1.9	900	7	2.1	2000	550	21	34	40	8
BFS505	19	SOT323	9	15	18	150	NPN	17	1.6	900	10	1.9	2000	-	4	10	5	6
BFS520	20	SOT323	9	15	70	300	NPN	15	1.6	900	9	1.9	2000	-	17	26	20	6
BFS540	21	SOT323	9	15	120	500	NPN	14	1.9	900	8	2.1	2000	-	21	34	40	8
PRF949	-	SOT416	9	10	50	150	NPN	16	1.5	1000	-	-	-	-	-	-	-	-
BFG310W/XR	30	SOT343XR	14	6	10	60	NPN	18	1.1	1000	-	-	-	-	1.8	8	5	3
BFG310/XR	30	SOT143XR	14	6	10	60	NPN	18	1.1	1000	-	-	-	-	1.8	8	5	3
BFG325W/XR	31	SOT343XR	14	6	35	210	NPN	18	1.1	3000	-	-	-	-	8.7	19	15	3
BFG325/XR	31	SOT143XR	14	6	35	210	NPN	18	1.1	3000	-	-	-	-	8.7	19	15	3
BFG403W	25	SOT343	17	4.5	3.6	16	NPN	-	1	900	-	1.6	2000	-	5	6	1	1
BFG21W	21	SOT343	18	4.5	200	600	NPN	-	-	-	10	-	1900	-	-	-	-	-
BFG480W	29	SOT343	21	4.5	250	360	NPN	-	1.2	900	-	1.8	2000	-	-	28	80	2
BFG410W	26	SOT343	22	4.5	12	54	NPN	-	0.9	900	-	1.2	2000	-	5	15	10	2
BFG424F	27	SOT343F	25	4.5	30	135	NPN	-	0.8	900	-	1.2	2000	-	12	22	25	2
BFG424W	27	SOT343	25	4.5	30	135	NPN	-	0.8	900	-	1.2	2000	-	12	22	25	2
BFG425W	27	SOT343	25	4.5	30	135	NPN	-	0.8	900	-	1.2	2000	-	12	22	25	2

= New

2.4 RF ICs

2.4.1 MMICs

Philips RF MMICs:
http://www.semiconductors.philips.com/markets/mms/products/discretes/mmic/index.html

General-purpose wideband amplifiers (50 Ohm gain blocks)

Type	Package	@		f_u[1]	@ 1GHz					Gain3 (db) @				Limits		
		Vs (V)	Is (mA)	@-3dB (GHz)	NF (dB)	Psat (dBm)	Gain[3] (dB)	P_1dB (dBm)	OIP_3 (dBm)	100 MHz	2.2 GHz	2.6 GHz	3.0 GHz	Vs (V)	Is (mA)	Ptot (mW)
BGA2711	SOT363	5	12	3.6[2]	4.7	2	12.9	-2	10	13	14.1	13.8	12.8	6	20	200
BGA2748	SOT363	3	5.7	1.9	1.8[2]	-4	21.3	-10	-2	14.8	17.6	14.2	11.3	4	15	200
BGA2771	SOT363	3	33	2.4	4.4	12[2]	21	11	22	20.3	20.4	17.5	15.2	4	50	200
BGA2776	SOT363	5	23.8	2.8	4.7	8	22.8[2]	5.5	17	22.2	23.2	20.8	18.7	6	34	200
BGA2709	SOT363	5	23.5	2.8	4	12.4	22.7	8.3	24	22.6	22.7	22.0	21.1	6	35	200
BGA2712	SOT363	5	12.5	2.8	3.9	4.8	21.3	0	12	20.9	21.9	20.8	18.6	6	25	200
BGM1011	SOT363	5	25.5	-	4.7	13.8	30	12.2	23	25.0	37.0	32.0	28.0	6	35	200
BGM1012	SOT363	3	14.6	3.6	4.8	9.7	20.1	6	18	19.5	20.4	19.9	18.7	4	50	200
BGM1013	SOT363	5	27.5	2.1	4	15	35	12	24	34.4	31.0	28.2	25.3	6	35	200
BGM1014	SOT363	5	21	2.5	4.2	12.9	32.3	11.2	20.5	30.0	34.1	30.5	26.4	6	30	200
BGA2715	SOT363	5	4.3[2]	3.0	2.6	-5	22	-9	14	14.0	22.0	21	19	6	8	200
BGA2716	SOT363	5	15.9[2]	3.6	4.9	11	24	7	24	24.0	24.0	24	23	6	25	200
BGA2717	SOT363	5	8.0	3.0	2.1	1	23	-3	20	20.0	23.0	23	20	6	15	200

■ = New Notes: 1. Upper -3 dB point, to gain at 1 GHz. 2. Optimized parameter 3. Gain = |S21|2

2-stage variable-gain linear amplifier

Type	Package	@		Frequency Range	@ 900MHz				@1900 MHz				Limits		
		Vs (V)	Is (mA)	(MHz)	Gain[1] (dB)	DG[2] (dB)	P1dB (dBm)	ACPR (dBc)	Gain[1] (dB)	DG[2] (dB)	P1dB (dBm)	ACPR (dBc)	Vs (V)	Is (mA)	Ptot (mW)
BGA2031/1	SOT363	3	51	800-2500	24	62	11	49	23	56	13	49	3.3	50	200

Notes: 1. Gain = GP, power gain. 2. DG = Gain control range

Wideband linear mixer

Type	Package	@		RF Input Freq. Range	IF Output Freq. Range	@ 880MHz			@2450 MHz			Limits		
		Vs (V)	Is (mA)	(MHz)	(MHz)	NF (dB)	Gain[1] (dB)	OIP3 (dBm)	NF (dB)	Gain[1] (dB)	OIP3 (dBm)	Vs (V)	Is (mA)	Ptot (mW)
BGA2022	SOT363	3	51	800-2500	50-500	9	5	4	9	6	10	4	20	40

Notes: 1. Gain = GC, Conversion gain

Low-noise wideband amplifiers

Type	Package	@		@ 900MHz			@1800 MHz			Gain[3] (db) @				Limits		
		Vs (V)	Is (mA)	NF (dB)	Gain (dB)	IIP_3 (dBm)	NF (dB)	Gain (dB)	IIP_3 (dBm)	100 MHz	1 GHz	2.6 GHz	3.0 GHz	Vs (V)	Is (mA)	Ptot (mW)
BGA2001	SOT343R	2.5	4	1.3	22[1]	-7.4	1.3	19.5[1]	-4.5	20	17.1	11.6	10.7	4.5	30	135
BGA2003	SOT343R	2.5	10[2]	1.8	24[1]	-6.5	1.8	16[1]	-4.8	26	18.6	11.1	10.1	4.5	30	135
BGA2004[4]	SOT363	2.7	6	-	-	-	1.4	18	-5	-	-	-	-	3.3	15	50
BGA2011	SOT363	3	15	1.5	19[3]	10	-	-	-	24	14.8	8	6.5	4.5	30	135
BGA2012	SOT363	3	7	-	-	-	1.7	16[3]	10	22	18.2	11.6	10.5	4.5	15	70

Notes: 1. MSG 2. Adjustable bias 3. |S21|2 4. Switched LNA with internal match for 1.8 GHz. Objective Data

General-purpose, med. power ampl. (50 ohm gain blocks)

Type	Package	@		@ 900MHz				@1800 MHz				Gain[3]	f_u[1]	Limits		
		Vs (V)	Is (mA)	NF (dB)	Gain[3] (dB)	OIP_3 (dBm)	P_1dB (dBm)	NF (dB)	Gain[3] (dB)	NF (dB)	P1dB (dBm)	2.5 GHz	@-3dB (MHz)	Vs (V)	Is (mA)	Ptot (mW)
BGA6289	SOT89	3.8	83	3.8	15	31	17	4.1	13	4.1	15	12	4000	6	120	480
BGA6489	SOT89	5.1	83	3.1	20	33	20	3.3	16	3.3	17	15	4000	6	120	480
BGA6589	SOT89	4.8	83	3	22	33	21	3.3	17	3.3	20	15	4000	6	120	480

Notes: 1 Determined by return loss(>10dB) 3. Gain = |S21|2

2.5 RF MOS transistors

2.5.1 JFETs

N-channel junction field-effect transistors for switching

Type	Package	V_{DS}	I_G	CHARACTERISTICS										
				I_{DSS}		$V_{(p)GS}$		R_{DSON}	Crs		t_{on}		t_{off}	
		(V)	(mA)	(mA)		(V)		(Ω)	(pF)		(ns)		(ns)	
		max	max	min	max	min	max	max	min	max	typ	max	typ	max
BSR56	SOT23	40	50	50	-	4	10	25	-	5	-	-	-	25
BSR57	SOT23	40	50	20	100	2	6	40	-	5	-	-	-	50
BSR58	SOT23	40	50	8	80	0.8	4	60	-	5	-	-	-	100
PMBFJ108	SOT23	25	50	80	-	3	10	8	-	15	4	-	6	-
PMBFJ109	SOT23	25	50	40	-	2	6	12	-	15	4	-	6	-
PMBFJ110	SOT23	25	50	10	-	0.5	4	18	-	15	4	-	6	
PMBFJ111	SOT23	40	50	20	-	3	10	30	-	typ.3	13	-	35	-
PMBFJ112	SOT23	40	50	5	-	1	5	50	-	typ.3	13	-	35	-
PMBFJ113	SOT23	40	50	2	-	0.5	3	100	-	typ.3	13	-	35	-
J108	SOT54	25	50	80	-	3	10	8	-	15	4	-	6	-
J109	SOT54	25	50	40	-	2	6	12	-	15	4	-	6	-
J110	SOT54	25	50	10	-	0.5	4	18	-	15	4	-	6	
J111	SOT54	40	50	20	-	3	10	30	-	typ.3	13	-	35	-
J112	SOT54	40	50	5	-	1	5	50	-	typ.3	13	-	35	-
J113	SOT54	40	50	2	-	0.5	3	100	-	typ.3	13	-	35	-
PMBF4391	SOT23	40	50	50	150	4	10	30	-	3.5	-	15	-	20
PMBF4392	SOT23	40	50	25	75	2	5	60	-	3.5	-	15	-	35
PMBF4393	SOT23	40	50	5	30	0.5	3	100	-	3.5	-	15	-	50

P-channel junction field-effect transistors for switching

Type	Package	V_{DS}	I_G	CHARACTERISTICS										
				I_{DSS}		$V_{(p)GS}$		R_{DSON}	Crs		t_{on}		t_{off}	
		(V)	(mA)	(mA)		(V)		(Ω)	(pF)		(ns)		(ns)	
		max	max	min	max	min	max	max	min	max	typ	max	typ	max
PMBFJ174	SOT23	30	50	20	135	5	10	85	typ.4		7	-	15	-
PMBFJ175	SOT23	30	50	7	70	3	6	125	typ.4		15	-	30	-
PMBFJ176	SOT23	30	50	2	35	1	4	250	typ.4		35	-	35	-
PMBFJ177	SOT23	30	50	1.5	20	0.8	2.25	300	typ.4		45	-	45	-
J174	SOT54	30	50	20	135	5	10	85	typ.4		7	-	15	-
J175	SOT54	30	50	7	70	3	6	125	typ.4		15	-	30	-
J176	SOT54	30	50	2	35	1	4	250	typ.4		35	-	35	-
J177	SOT54	30	50	1.5	20	0.8	2.25	300	typ.4		45	-	45	-

N-channel junction field-effect transistors

Type	Package	V_{DS}	I_G	CHARACTERISTICS							
				I_{DSS} (mA)		$V_{(p)GS}$ (V)		|Yfs| (mS)		Crs (pF)	
		(V)	(Ma)	min	max	min	max	min	max	min	max
DC, LF and HF amplifiers											
BF245A	SOT54	30	10	2	6.5	<8		3	6.5	1.1	-
BF245B	SOT54	30	10	6	15	<8		3	6.5	1.1	-
BF245C	SOT54	30	10	12	25	<8		3	6.5	1.1	-
BF545A	SOT23	30	10	2	6.5	0.4	7.5	3	6.5	0.8	-
BF545B	SOT23	30	10	6	15	0.4	7.5	3	6.5	0.8	-
BF545C	SOT23	30	10	12	25	0.4	7.5	3	6.5	0.8	-
BF556A	SOT23	30	10	3	7	0.5	7.5	4.5		0.8	-
BF556B	SOT23	30	10	6	13	0.5	7.5	4.5		0.9	-
BF556C	SOT23	30	10	11	18	0.5	7.5	4.5		0.8	-
Preamplifiers for AM tuners in car radios											
BF861A	SOT23	25	10	2	6.5	0.2	1.0	12		2.1	2.7
BF861B	SOT23	25	10	6	15	0.5	1.5	16		2.1	2.7
BF861C	SOT23	25	10	12	25	0.8	2	20		2.1	2.7
BF862	SOT23	20	10	13	25	<20		35		2.5	-
RF stages FM portables, car radios, main radios & mixer stages											
BF510[1)]	SOT23	20	10	0.7	3	typ. 0.8		2.5		0.4	0.5
BF511[1)]	SOT23	20	10	2.5	7	typ. 1.5		4		0.4	0.5
BF512[1)]	SOT23	20	10	6	12	typ. 2.2		6		0.4	0.5
BF513[1)]	SOT23	20	10	10	18	typ. 3		7		0.4	0.5
Low-level general purpose amplifiers											
BFR30	SOT23	25	5	4	10	<5		1	4	1.5	-
BFR31	SOT23	25	5	1	5	<2.5		1.5	4.5	1.5	-
General-purpose amplifiers											
BFT46	SOT23	25	5	0.2	1.5	<1.2		>1		1.5	-
AM input stages UHF/VHF amplifiers											
PMBFJ308	SOT23	25	50	12	60	1	6.5	>10		1.3	2.5
PMBFJ309	SOT23	25	50	12	30	1	4	>10		1.3	2.5
PMBFJ310	SOT23	25	50	24	60	2	6.5	>10		1.3	2.5
PMBFJ620	SOT363	25	50	24	60	2	6.5	10		1.3	2.5

[1)] Asymmetrical

2.5.2 MOSFETs

N-channel, single MOSFETS for switching

Type	Package	V_{DS}	CHARACTERISTICS														
			I_D	I_{DSS}		$V_{(p)GS}$		R_{DSON}	Crs		t_{on}		t_{off}		$\|S_{21(on)}\|^2$	$\|S_{21(off)}\|^2$	MODE
				(mA)		(V)		(W)	(pF)		(ns)		(ns)		(dB)	(dB)	
		(V)	mA	min	max	min	max	max	min	max	typ	max	typ	max	max	min	
BSS83	SOT143	10	50	-	-	0.1[2]	2[1]	45	typ.0.6		-	1	-	5	-	-	enh.
Silicon RF Switches																	
BF1107	SOT23	3	10	-	100[3]	-	7[4]	20	-	-	-	-	-	-	2.5	30	depl.
BF1108[5]	SOT143B	3	10	-	100[3]	-	7[4]	20	-	-	-	-	-	-	3	30	depl.
BF1108R[5]	SOT143R	3	10	-	100[3]	-	7[4]	20	-	-	-	-	-	-	3	30	depl.

N-channel, dual-gate MOSFETS

Type	Package	V_{DS}	CHARACTERISTICS											
			I_D	I_{DSS}		$V_{(p)GS}$		|Yfs|		Cis	Cos	F @ 800 MHz	VHF	UHF
				(mA)		(V)		(mS)		(pF)	(pF)	(dB)		
		(V)	(mA)	min	max	min	max	min	max	typ.	typ.	typ.		
With external bias														
BF901	SOT143	12	30	2	18	-	0.7[6]	25	-	2.35	1.4	1.7	X	X
BF901R	SOT143R	12	30	2	18	-	0.7[6]	25	-	2.35	1.4	1.7	X	X
BF908	SOT143	12	40	3	27	-	2	36	-	3.1	1.7	1.5	X	X
BF908R	SOT143R	12	40	3	27	-	2	36	-	3.1	1.7	1.5	X	X
BF908WR	SOT343R	12	40	3	27	-	2	36	-	3.1	1.7	1.5	X	X
BF991	SOT143	20	20	4	25	-	2.5	10	-	2.1	1.1	0.7[7]	X	-
BF992	SOT143	20	40	-	-	-	1.3	20	-	4	2	1.2[7]	X	-
BF994S	SOT143	20	30	4	20	-	2.5	15	-	2.5	1	1[7]	X	-
BF996S	SOT143	20	30	4	20	-	2.5	15	-	2.3	0.8	1.8	-	X
BF998	SOT143	12	30	2	18	-	2.5	21	-	2.1	1.05	1	X	X
BF998R	SOT143R	12	30	2	18	-	2.5	21	-	2.1	1.05	1	X	X
BF998WR	SOT343R	12	30	2	18	-	2.5	22	-	2.1	1.05	1	X	X
Fully internal bias														
BF1105	SOT143	7	30	8	16	-	-	25	-	2.2[9]	1.2[8]	1.7	X	X
BF1105R	SOT143R	7	30	8	16	-	-	25	-	2.2[9]	1.2[8]	1.7	X	X
BF1105WR	SOT343R	7	30	8	16	-	-	25	-	2.2[9]	1.2[8]	1.7	X	X
BF1109	SOT143	11	30	8	16	-	1.2[6]	24	-	2.2[9]	1.3[8]	1.5	X	X
BF1109R	SOT143R	11	30	8	16	-	1.2[6]	24	-	2.2[9]	1.3[8]	1.5	X	X
BF1109WR	SOT343R	11	30	8	16	-	1.2[6]	24	-	2.2[9]	1.3[8]	1.5	X	X
Partly internal bias														
BF904(A)	SOT143	7	30	8	13	-	1[6]	22	-	2.2	1.3	2	X	X
BF904(A)R	SOT143R	7	30	8	13	-	1[6]	22	-	2.2	1.3	2	X	X
BF904(A)WR	SOT343R	7	30	8	13	-	1[6]	22	-	2.2	1.3	2	X	X
BF909(A)	SOT143	7	40	12	20	-	1[6]	36	-	3.6	2.3	2	X	X
BF909(A)R	SOT143R	7	40	12	20	-	1[6]	36	-	3.6	2.3	2	X	X
BF909(A)WR	SOT343R	7	40	12	20	-	1[6]	36	-	3.6	2.3	2	X	X

1) Asymmetrical
2) $V_{GS(th)}$
3) I_D
4) V_{SG}
5) Depletion FET plus diode in one package
6) V_{GS}(th)
7) @ 200 MHz
8) C_{OSS}
9) C_{ig}
10) Two equal dual gate MOSFETs in one package
11) Two low noise gain amplifiers in one package
12) Transistor A: fully internal bias, transistor B: partly internal bias
13) Internal switching function
14) Transistor A: partly internal bias, transistor B: fully internal bias

N-channel, dual-gate MOSFETS

Type	Package	V_{DS}	CHARACTERISTICS											
			I_D	I_{DSS}		$V_{(p)GS}$		|Yfs|		Cis	Cos	F @ 800 MHz	VHF	UHF
				(mA)		(V)		(mS)		(pF)	(pF)	(dB)		
		(V)	(mA)	min	max	min	max	min	max	typ.	typ.	typ.		
Partly internal bias														
BF1100	SOT143	14	30	8	13	-	1[6]	24	-	2.2	1.4	2	X	X
BF1100R	SOT143R	14	30	8	13	-	1[6]	24	-	2.2	1.4	2	X	X
BF1100WR	SOT343R	14	30	8	13	-	1[6]	24	-	2.2	1.4	2	X	X
BF1101	SOT143	7	30	8	16	-	1[6]	25	-	2.2	1.2[8]	1.7	X	X
BF1101R	SOT143R	7	30	8	16	-	1[6]	25	-	2.2	1.2[8]	1.7	X	X
BF1101WR	SOT343R	7	30	8	16	-	1[6]	25	-	2.2	1.2[8]	1.7	X	X
BF1102(R)[10]	SOT363	7	40	12	20	-	1.2[6]	36	-	2.8[9]	1.6[8]	2	X	X
BF1201	SOT143	10	30[1]	11	19	-	1.2[6]	23	-	2.6	0.9	1.9	X	X
BF1201R	SOT143R	10	30[1]	11	19	-	1.2[6]	23	-	2.6	0.9	1.9	X	X
BF1201WR	SOT343R	10	30[1]	11	19	-	1.2[6]	23	-	2.6	0.9	1.9	X	X
BF1202	SOT143	10	30	8	16	-	1.2[6]	25	-	1.7	0.85	1	X	X
BF1202R	SOT143R	10	30	8	16	-	1.2[6]	25	-	1.7	0.85	1	X	X
BF1202WR	SOT343R	10	30	8	16	-	1.2[6]	25	-	1.7	0.85	1	X	X
BF1203[11]	SOT363	10	30	11	19	-	1.2[6]	23	-	2.6	0.9	1.8	X	X
BF1204[10]	SOT363	10	30	8	16	-	1.2[6]	25	-	1.7	0.85	1	X	X
BF1205C[11][12][13]	SOT363	6	30	14	24	0.3	1	26	41	2.2	0.75	1.4	X	-
		6	30	9	17	0.3	1	28	43	2	0.85	1.4	-	X
BF1205[11][12][13]	SOT363	10	30	8	16	0.3	1.0	26	40	1.8	0.75	1.2	X	-
		7	30	8	16	0.3	1.0	26	40	2.0	0.85	1.4	-	X
BF1206[11]	SOT363	6	30	14	23	0.3	1.0	33	45	2.6	1.1	1.6	X	-
		6	30	9	17	0.3	1.0	29	41	1.9	0.85	1.4	-	X
BF1206F	SOT666	6	30	14	23	0.3	1.0	33	45	2.6	1.1	1.6	X	-
		6	30	9	17	0.3	1.0	29	41	1.9	0.85	1.4	-	X
BF1207[11][12][14]	SOT363	6	30	13	23	0.3	1.0	30 typ	-	2.2	0.9	1.4	X	-
		6	30	8	18	0.3	1.0	32 typ	-	2	0.85	1.4	-	X
BF1207F[11][12][14]	SOT666	6	30	13	23	0.3	1.0	30 typ	-	2.2	0.9	1.4	X	-
		6	30	8	18	0.3	1.0	32 typ	-	2	0.85	1.4	-	X
BF1208[11][12][13]	SOT666	6	30	14	24	0.3	1	26	41	2.2	0.75	1.4	X	-
		6	30	9	17	0.3	1	28	43	2	0.85	1.4	-	X
BF1211	SOT143	6	30	11	19	0.3	1.0	25	40	2.1	0.9	1.4	X	-
BF1211R	SOT143R	6	30	11	19	0.3	1.0	25	40	2.1	0.9	1.4	X	-
BF1211WR	SOT343	6	30	11	19	0.3	1.0	25	40	2.1	0.9	1.4	X	-
BF1212	SOT143	6	30	8	16	0.3	1.0	28	43	1.7	0.9	1.1	-	X
BF1212R	SOT143R	6	30	8	16	0.3	1.0	28	43	1.7	0.9	1.1	-	X
BF1212WR	SOT343	6	30	8	16	0.3	1.0	28	43	1.7	0.9	1.1	-	X

= New

1) Asymmetrical
2) $V_{GS(th)}$
3) I_D
4) V_{SG}
5) Depletion FET plus diode in one package
6) $V_{GS}(th)$
7) @ 200 MHz
8) C_{OSS}
9) C_{ig}
10) Two equal dual gate MOSFETs in one package
11) Two low noise gain amplifiers in one package
12) Transistor A: fully internal bias, transistor B: partly internal bias
13) Internal switching function
14) Transistor A: partly internal bias, transistor B: fully internal bias

2.6 RF Modules

CATV types for Chinese (C-types) and Indian market (OM-types):

New in our CATV Hybrid portfolio are two families of products. The C types are specially designed for the Chinese market, fitting two major governmental projects. And the OM types, also called the INDI types, are designed for low end CATV infrastructure networks deployed in India. Both families will be extended in the following months to cover most of those two specific market segments.

C types (China):

- CATV push pulls, chapter 2.6.2.:
  BGY588C and BGE788C
- CATV power doubler, chapter 2.6.3.:
  BGD712C
- CATV optical receiver, chapter 2.6.4.:
  BGO807C

OM types (India):

- CATV push pulls, chapter 2.6.2.:
  OM7650 and OM7670

2.6.1 CATV Reverse Hybrids

Frequency Range	Type Number	Gain (dB)	Slope (dB)	FL	S11/ S22	CTB	XMOD	CSO	@ Ch	@ Vo (dBmV)	F @ fmax	Itot (mA)
5 - 65 Mhz	BGS67A	25 - 26	-0.1 - 0.6	± 0.2	20/20	-64	-54	-	4	50	3.5	85
5 - 75 Mhz	BGY68	29.2 - 30.8	-0.2 - 0.5	± 0.2	20/20	-68	-60	-	4	50	3.5	135
5 - 120 Mhz	BGY66B	24.5 - 25.5	-0.2 - 0.5	± 0.2	20/20	-66	-54	-	14	48	5	135
	BGY67	21.5 - 22.5	-0.2 - 0.5	± 0.2	20/20	-67	-60	-	22	50	5.5	230
5 - 200 MHz	BGY67A	23.5 - 24.5	-0.2 - 0.5	± 0.2	20/20	-67	-59	-	22	50	5.5	230
	BGR269	34.5 - 35.5	0 - 0.6	± 0.4	20/20	-57	-50	-70	28	50	5.2	160

2.6.2 CATV Push-Pulls

Frequency Range	Type Number	Gain (dB)	Slope (dB)	FL	S11/ S22	CTB	XMOD	CSO	@ Ch	@ Vo (dBmV)	F @ fmax	Itot (mA)
40 - 550 MHz	OM7650	33.2 - 35.5	0.2 - 2	-	10/10	-45	-	-57	77	44	8	340
	BGY588C	33.2 - 35.5	0.2 - 1.7	± 0.5	16/16	-57	-	-62	77	44	8	345
	BGY585A	17.7 - 18.7	0.5 - 2	± 0.2	20/20	-59	-62	-59	77	44	8	240
	BGY587	21.5 - 22.5	0.2 - 1.5	± 0.2	20/20	-57	-58	-54	77	44	7	240
	BGY587B	26.2 - 27.8	0.5 - 2.5	± 0.4	20/20	-57	-60	-57	77	44	6.5	340
	BGY588N	33.5 - 35.5	0.5 - 1.5	± 0.4	20/20	-57	-59	-62	77	44	6	340
40 - 600 MHz	BGY685A	17.7 - 18.7	0.5 - 2.2	± 0.2	20/20	-55	-60	-56	85	44	8.5	240
	BGY687	21 - 22	0.8 - 2.2	± 0.2	20/20	-54	-54	-52	85	44	6.5	240
40 - 750 MHz	OM7670	33.2 - 35.2	1/4	-	10/8	-43	-	-54	110	44	8	340
	BGY785A	18 - 19	0 - 2	± 0.3	20/20	-53	-56	-53	110	44	7	240
	BGE788C	33.2 - 35.2	0.3 - 2.3	± 0.6	16/16	-49	-	-52	110	44	8	325
	BGY787	21 - 22	0 - 1.5	± 0.5	20/20	-53	-52	-53	110	44	6.5	240
	BGE787B	28.5 - 29.5	0.2 - 2.2	± 0.5	20/20	-50	-54	-56	110	44	7	320
	BGE788	33.5 - 34.5	0.5 - 2.5	± 0.5	20/20	-49	-51	-52	110	44	7	320
40 - 860 MHz	BGY883	14.5 - 15.5	0 - 2	± 0.3	20/20	-61	-61	-61	49	44	8.5	235
	BGE885	16.5 - 17.5	0.2 - 1.2	± 0.5	14/14	-	-	-	129	59	8	240
	BGX885N	16.5 - 17.5	0.2 - 1.4	± 0.3	20/20	-	-	-	129	59	8	240
	BGY885A	18 - 19	0 - 2	± 0.3	20/20	-61	-61	-61	49	44	8	240
	BGY885B	19.5 - 20.5	0 - 2	± 0.3	20/20	-60	-60	-60	49	44	7.5	235
	BGY887	21 - 22	0.2 - 2	± 0.3	20/20	-55	-61	-57	129	40	6.5	235
	CGY887	21.2 - 21.8	0.6 - 1.4	± 0.5	20/21	-59	-56	-57	132	40	5.5	240
	CGY887A	25.2 - 25.8	0.5 - 1.4	± 0.5	20/21	-62	-56	-59	129	40	5	240
	CGY887B	27.2 - 27.8	0.5 - 1.5	± 0.5	24/23	-57.5	-51	-58	132	44	5	310
	BGY887B	28.5 - 29.5	0.5 - 2.5	± 0.5	20/20	-60	-60	-60	49	44	6.5	340
	BGY888	33.5 - 34.5	0.5 - 2.5	± 0.5	20/20	-60	-59	-55	49	44	7	340
40 - 1000 MHz	BGY1085A	18 - 19	0 - 2	± 0.3	20/20	-53	-54	-56	150	44	7.5	240

= New

2.6.3 CATV Power Doublers

Frequency Range	Type Number	Gain (dB)	Slope (dB)	FL	S11/ S22	CTB	XMOD	CSO	@ Ch	@ Vo (dBmV)	F @ fmax	Itot (mA)
40 - 550 Mhz	BGD502	18 - 19	0.2 - 2.2	± 0.3	20/20	-65	-68	-62	77	44	8	435
40 - 750 MHz	BGD702	18 - 19	0.2 - 2	± 0.5	20/20	-58	-62	-58	110	44	8.5	435
	BGD702N	18 - 19	0.2 - 2	± 0.25	20/20	-58	-62	-58	110	44	8.5	435
	BGD712	18.2 - 18.8	0.5 - 1.5	± 0.35	23/23	-62	-63	-63	112	44	7	410
	BGD712C	18.2 - 18.8	0.5 - 1.5	± 0.4	17/17	-62	-	-63	112	44	7	410
	BGD704	19.5 - 20.5	0 - 2	± 0.5	20/20	-57	-61	-56	110	44	8.5	435
	BGD714	20 - 20.6	0.5 - 1.5	± 0.35	23/23	-61	-62	-62	112	44	7	410
40 - 860 MHz	BGD885	16.5 - 17.5	0.2 - 1.6	± 0.5	20/20	-	-	-	129	59	8	450
	BGD802	18 - 19	0.2 - 2	± 0.5	20/20	-54	-59	-56	129	44	9	410
	BGD812	18.2 - 18.8	0.4 - 1.4	± 0.5	23/23	-58	-62	-60	132	44	7.5	410
	BGD902	18.2 - 18.8	0.4 - 1.4	± 0.3	21/25	-58	-62	-58	129	44	8	435
	BGD902L	18 - 19	0.4 - 1.4	± 0.3	21/21	-56	-60	-59	129	44	7.5	380
	CGD923	19.25 - 19.75	0 - 1	± 0.6	20/20	-56	-57	-54	132	48	5.5	475
	BGD804	19.5 - 20.5	0.2 - 2	± 0.5	20/20	-53	-61	-54	129	44	7.5	410
	BGD814	19.7 - 20.3	0.4 - 1.4	± 0.5	22/25	-57.5	-62	-59	132	44	7.5	410
	BGD904	19.7 - 20.3	0.4 - 1.4	± 0.3	21/25	-57.5	-61	-58	129	44	7.5	435
	BGD904L	19.7 - 20.3	0.4 - 1.4	± 0.3	21/25	-55	-59	-59	129	44	7.5	380
	CGD914	19.75 - 20.25	0.2 - 1.5	± 0.45	20/21	-59.5	-64	-50	132	44	4	375
	BGD816L	21.2 - 21.8	0.5 - 1.5	± 0.5	22/25	-55	-58	-56	129	44	7.5	375
	BGD906	21.2 - 21.8	0.5 - 1.5	± 0.35	22/22	-57	-60	-54	129	44	7.5	435
40 - 870 MHz	CGD944C	23 - 25	0 - 1	± 0.5	18/18	-66	-58	-68	98	48	7	450
	CGD942C	20.5 - 23	0 - 1	± 0.5	18/18	-66	-58	-68	98	48	7	450
40 - 1000 MHz	CGD1042	20.5 - 23	0 - 1	± 0.3	20/23	-74	-64	-69	79	58.1	4.6	485
	CGD1044	23.5 - 25.5	0 - 1	± 0.3	20/23	-74	-64	-69	79	58.1	4.6	485

= New

2.6.4 CATV Optical Receivers

Frequency Range	Type Number	Rmin (V/W)	Slope (dB)	FL (dB)	S22 (dB)	d3	d2	@fm (MHz)	@Pi (mW)	F @fmax	Conn.	Itot (mA)
Optical Reverse Receiver												
5 - 300	BGO387	800	0 - 2	± 0.3	16	-80	-70	54.25	1	7.5	--	190
Forward Path Receiver												
40 - 750	BGO747	800	0 - 2	1	11	-75	-63	746.5	1	7	--	205
	BGO747/FC0	750	0 - 2	1	11	-75	-63	746.5	1	7	FC	205
40 - 870	BGO807	800	0 - 2	1	11	-71	-55	854.5	1	8.5	--	205
	BGO807C	800	0 - 2	1	11	-71	-54	854.4	1	8.5	--	205
	BGO807/FC0	750	0 - 2	1	11	-71	-55	854.5	1	8.5	FC	205
	BGO807/SC0	750	0 - 2	1	11	-71	-55	854.5	1	8.5	SC	205
	BGO827	800	0 - 2	1	11	-73	-57	854.5	1	9	--	205
	BGO827/FC0	750	0 - 2	1	11	-73	-57	854.5	1	8.5	FC	205
	BGO827/SC0	750	0 - 2	1	11	-73	-57	854.5	1	8.5	SC	205
	BGO847	800	0 - 2	1	11	-73	-63	854.5	1	8	--	205

*) NOTES: This table is for reference only: it contains some calculated values that are not guaranteed. For full data please refer to the latest datasheet. Some parts may still be in development. For availability please check the Philips Sales office.

Description:

Frequency Range	Minimum and maximum frequency in MHz at which data are characterized
@Ch/@Vo	The number of channels and the output voltage at which CTB, XM, CSO and d2 are characterized
@fm	Measurement frequency
F	Noise Figure in dB or Noise in pA/Sqrt(Hz)
FL	Flatness
Rmin	Minimum responsivity of optical receivers

2.7 Fiber-optic transceiver ICs

2.7.1 Laser Drivers

Part number	Data-rate Mb/s	Package Type	Bare Die	Imod/IBias [mA]	Dual Loop	Input	Vcc	Power Dissipation mW
TZA3047A	30-1250	SOT560-1	X	100-100	X	CML/PECL	3.3	420
TZA3047B	30-1250	SOT560-1	X	100-100	X	CML/PECL	3.3_	420
TZA3050	30-1250	SOT560-1	X	100-100	-	CML/PECL	3.3_	420
TZA3010B	30-3200	SOT560-1	-	60-100	-	CML/PECL	3.3_	420
TZA3011A	30-3200	SOT560-1	X	100-100	X	CML/PECL	3.3	420
TZA3011B	30-3200	SOT560-1	X	100-100	X	CML/PECL	3.3_	420

2.7.2 Trans Impedance Amplifiers

Part number	Data-rate Mb/s	Package Type	Bare Die	In [nA]	Eq Sens [dBm]	RSSI	Output	Vcc	Power Dissipation mW
TZA3036	0-155	die only	X	10	-40	Yes	50 Ohm	3.3	50
TZA3026	0-622	die only	X	67	-32	Yes	50 Ohm	3.3	60
TZA3046	0-1250	die only	X	130	-29	Yes	50 Ohm	3.3	70
TZA3013	0-2488	die only	X	450	-24	-	50 Ohm	3.3	86

■ = New

*) NOTES:
All figures given are typical at 25 deg C
Power dissipation is given for Vcc = 3.3 V
Eq. sensitivity conditions: Calculated from noise figure using a lowpass bandwidth filter at 0.7x bit rate and a source with an extinction ratio of 10% and a photodiode responsivity of 0.9A/W.
3.3_ means that the output stage is capable of driving 5 V laser applications

3. Design-in tools

This chapter will make it easier to find and get hold of design-in information and materials, with web links or references to the Philips representative / authorized distributor.

3.1 S-Parameters

S-Parameters help you to simulate the behaviour of our devices to your specific adjustments on e.g. voltage, ampere.

3.1.1 Wideband transistors & MMICs

First, click on the type number which takes you directly to the corresponding product information page on the Philips Semiconductor internet.
Second, scole down on this product information page to find the S-Parameters.

Wideband			MMICs
BFG135	BFG94	BFS17A	BGA2001
BFG198	BFG97	BFS17W	BGA2003
BFG21W	BFM505	BFS25A	BGA2711
BFG31	BFM520	BFS505	BGA2748
BFG35	BFQ149	BFS520	BGA2771
BFG403W	BFQ18A	BFS540	BGA2776
BFG410W	BFQ19	BFT25	BGA2709
BFG425W	BFQ67	BFT25A	BGA2712
BFG480W	BFQ67W	BFT92	BGM1011
BFG505	BFR106	BFT92W	BGM1012
BFG520	BFR505	BFT93	BGM1013
BFG520W	BFR520	BFT93W	BGM1014
BFG540	BFR540	PBR941	BGA2715
BFG540W	BFR92A	PBR951	BGA2716
BFG541	BFR92AW	PRF947	BGA2717
BFG590	BFR93A	PRF957	BGA2011
BFG591	BFR93AW		BGA2012
BFG93A	BFS17		

Or click on the web link(s) below, which takes you to a list of wideband transistors / MMICs with available S-Parameters on the Philips Semiconductor internet.
http://www.semiconductors.philips.com/models/spicespar/wideband.html
http://www.semiconductors.philips.com/models/spicespar/mmics.html

3.2 Spice models

Spice models help you to create the optimal performance and to understand which external components have a certain influence on that performance.

3.2.1 Wideband transistors

First, click on the type number which takes you directly to the corresponding product information page on the Philips Semiconductor internet.
Second, scole down on this product information page to find the Spice models.

BFG10	BFG505/X	BFG93A	BFS17
BFG10/X	BFG505W/X	BFG94	BFS17A
BFG10W/X	BFG520	BFG97	BFS17W
BFG135	BFG520/X	BFG97	BFS25A
BFG198	BFG520/XR	BFM505	BFS505
BFG21W	BFG520W	BFM520	BFS520
BFG25A/X	BFG520W/X	BFQ149	BFS540
BFG25AW/X	BFG540	BFQ18A	BFT25A
BFG31	BFG540/X	BFQ19	BFT92
BFG310/XR	BFG540/XR	BFQ67	BFT92W
BFG310W/XR	BFG540W	BFQ67W	BFT93
BFG325/XR	BFG540W/X	BFR106	BFT93W
BFG325W/XR	BFG540W/XR	BFR505	PBR941
BFG35	BFG541	BFR520	PBR951
BFG403W	BFG590	BFR540	PRF947
BFG410W	BFG590/X	BFR92A	PRF949
BFG425W	BFG591	BFR92AW	PRF957
BFG480W	BFG67/X	BFR93A	
BFG505	BFG92A/X	BFR93AW	

Or click on the web link below, which takes you to a list of wideband transistors with available Spice models on the Philips Semiconductor internet.
http://www.semiconductors.philips.com/models/spicespar/wideband.html

3.2.2 Field effect transistors

First, click on the type number which takes you directly to the corresponding product information page on the Philips Semiconductor internet.
Second, scole down on this product information page to find the Spice models.

BF245A	BF904	BFR31	J177
BF245B	BF904R	BFT46	PMBF4391
BF245C	BF904WR	BSR56	PMBF4392
BF510	BF908	BSR57	PMBF4393
BF511	BF908R	BSR58	PMBFJ108
BF512	BF908WR	BSS83	PMBFJ109
BF513	BF909	J108	PMBFJ110
BF545A	BF909R	J109	PMBFJ111
BF545B	BF909WR	J110	PMBFJ112
BF545C	BF992	J111	PMBFJ113
BF556A	BF994S	J112	PMBFJ174
BF556B	BF998	J113	PMBFJ175
BF861A	BF998R	J174	PMBFJ176
BF861B	BF998WR	J175	PMBFJ177
BF861C	BFR30	J176	

Or click on the web link below, which takes you to a list of field effect transistors with available Spice models on the Philips Semiconductor internet.
http://www.semiconductors.philips.com/models/spicespar/fet.html

3.2.2 Field effect transistors

First, click on the type number which takes you directly to the corresponding product information page on the Philips Semiconductor internet.
Second, scole down on this product information page to find the Spice models.

BB141	BB149	BB200	BB804
BB142	BB149A	BB201	BBY39
BB143	BB156	BB202	
BB145	BB179	BB207	
BB145B	BB179B	BB208-02	

Or click on the web link below, which takes you to a list of varicap diodes with available Spice models on the Philips Semiconductor internet.
http://www.semiconductors.philips.com/models/spicespar/varicap.html

3.3 Application notes

http://www.semiconductors.philips.com/markets/mms/documentation/app_notes/
For the application notes we would like to refer you to chapter 1 of this manual. Per application we mentioned the recommended application notes which are available on the internet (with interactive link) or via your local Philips representative or authorized distributor (look at the last chapter: Web Links and Contacts).

3.4 Demo boards

3.4.1 MMIC demo boards are (limited) available via your via your local Philips representative or authorized distributor (look at the last chapter: Web Links and Contacts).

BGA2001	BGA2022	BGA2716	BGA6289
BGA2003	BGA2711	BGA2771	BGA6489
BGA2012	BGA2715	BGA2776	BGA6589

3.4.2 Transimpedance amplifier demo boards are (limited) available via your via your local Philips representative or authorized distributor (look at the last chapter: Web Links and Contacts).

TZA3026
TZA3036
TZA3046

3.5 Samples of products in development

For development samples, please ask your local Philips representative or authorized distributor (look at the last chapter: Web Links and Contacts)
to order the latest versions at the RF development team.

3.6 Samples of released products

Of all released products, samples are available in the sample warehouse. Your local Philips representative (look at the last chapter: Web Links and Contacts), can order these samples to a certain maximum quantity at the online sample store for you.

3.7 Datasheets

Of all released products, datasheets are available on the Philips Semiconductor internet. Simply 'clicking' on a product type (in this manual chapter 1 or 2) takes you to the corresponding product information page on the Philips Semiconductor website.

3.8 Design-in support

If you need special design-in support from our design-in engineers, please ask your local Philips representative or authorized distributor (look at the last chapter: Web Links and Contacts), for your request at the RF development team.

4. Cross-references & Replacements

Philips cross-references:
http://www.semiconductors.philips.com/products/xref/

Philips end-of-life:
http://www.semiconductors.philips.com/products/eol/

4.1 Cross-references: Manufacturer types versus Philips types

In alphabetical order of manufacturer type

Abbreviations:

BS diode	Band Switch Diode
CATV PD	CATV Power Doubler
CATV PPA	CATV Push Pull Amplifier
CATV PPA/HG	CATV Push Pull Amplifier High Gain
CATV RA	CATV Reverse Amplifier
FET	Field Effect Transistor
IS	Industry Standard
MMIC	Monolitic Microwave Integrated Circuit
Varicap	Varicap Diode
WB trs 1-4	Wideband Transistor 1-4 generation
WB trs 5-7	Wideband Transistor 5-7 generation

Manufacturer Type	Manufacturer	Philips Type	Product Family
1SS314	Toshiba	BA591	BS diode
1SS356	Rohm	BA591	BS diode
1SS381	Toshiba	BA277	BS diode
1SS390	Rohm	BA891	BS diode
1SV172	Toshiba	BAP50-04	Pin diode
1SV214	Toshiba	BB149	Varicap
1SV214	Toshiba	BB149A	Varicap
1SV215	Toshiba	BB153	Varicap
1SV228	Toshiba	BB201	Varicap
1SV231	Toshiba	BB152	Varicap
1SV232	Toshiba	BB148	Varicap
1SV233	Sanyo	BAP70-03	Pin diode
1SV234	Sanyo	BAP64-04	Pin diode
1SV239	Toshiba	BB145B	Varicap
1SV241	Sanyo	BAP64-02	Pin diode
1SV246	Sanyo	BAP64-04W	Pin diode
1SV247	Sanyo	BAP70-02	Pin diode
1SV248	Sanyo	BAP50-02	Pin diode
1SV249	Sanyo	BAP50-04W	Pin diode
1SV250	Sanyo	BAP50-03	Pin diode
1SV251	Sanyo	BAP50-04	Pin diode
1SV252	Toshiba	BAP50-04W	Pin diode
1SV254	Toshiba	BB179	Varicap
1SV263	Sanyo	BAP50-02	Pin diode
1SV264	Sanyo	BAP50-04W	Pin diode
1SV266	Sanyo	BAP50-03	Pin diode
1SV267	Sanyo	BAP50-04	Pin diode
1SV269	Toshiba	BB148	Varicap
1SV270	Toshiba	BB156	Varicap
1SV271	Toshiba	BAP50-03	Pin diode
1SV277	Toshiba	BB142	Varicap
1SV278	Toshiba	BB179	Varicap
1SV279	Toshiba	BB179	Varicap
1SV280	Toshiba	BB145	Varicap
1SV282	Toshiba	BB178	Varicap
1SV282	Toshiba	BB178	Varicap
1SV282	Toshiba	BB187	Varicap
1SV283	Toshiba	BB187	Varicap
1SV283	Toshiba	BB178	Varicap
1SV283	Toshiba	BB178	Varicap
1SV283	Toshiba	BB187	Varicap
1SV284	Toshiba	BB156	Varicap
1SV285	Toshiba	BB142	Varicap

Manufacturer Type	Manufacturer	Philips Type	Product Family
1SV288	Toshiba	BB152	Varicap
1SV290	Toshiba	BB182	Varicap
1SV294	Sanyo	BAP70-03	Pin diode
1SV305	Toshiba	BB202	Varicap
1SV307	Toshiba	BAP51-03	Pin diode
1SV308	Toshiba	BAP51-02	Pin diode
1SV314	Toshiba	BB143	Varicap
1SV329	Toshiba	BB143	Varicap
1T362	Sony	BB149	Varicap
1T362 A	Sony	BB149A	Varicap
1T363 A	Sony	BB153	Varicap
1T368 A	Sony	BB148	Varicap
1T369	Sony	BB152	Varicap
1T379	Sony	BB131	Varicap
1T397	Sony	BB152	Varicap
1T399	Sony	BB148	Varicap
1T402	Sony	BB179B	Varicap
1T402	Sony	BB179B	Varicap
1T403	Sony	BB178	Varicap
1T403	Sony	BB178	Varicap
1T404A	Sony	BB187	Varicap
1T405 A	Sony	BB187	Varicap
1T406	Sony	BB182	Varicap
1T408	Sony	BB187	Varicap
2N3330	IS	J176	FET
2N3331	IS	J176	FET
2N4220	IS	BF245A	FET
2N4856	IS	BSR56	FET
2N4857	IS	BSR57	FET
2N4858	IS	BSR58	FET
2N5114	IS	J174	FET
2N5115	IS	J175	FET
2N5116	IS	J175	FET
2N5432	IS	J108	FET
2N5433	IS	J108	FET
2N5434	IS	J109	FET
2N5457	IS	BF245A	FET
2N5458	IS	BF245A	FET
2N5459	IS	BF245B	FET
2N5653	IS	J112	FET
2N5654	IS	J111	FET
2SC4094	NEC	BFG520/XR	WB trs 1-4
2SC4095	NEC	BFG520/XR	WB trs 1-4

Manufacturer Type	Manufacturer	Philips Type	Product Family
2SC4182	NEC	BFS17W	WB trs 1-4
2SC4184	NEC	BFS17W	WB trs 1-4
2SC4185	NEC	BFS17W	WB trs 1-4
2SC4186	NEC	BFR92AW	WB trs 1-4
2SC4226	NEC	PRF957	WB trs 1-4
2SC4227	NEC	BFQ67W	WB trs 1-4
2SC4228	NEC	BFS505	WB trs 1-4
2SC4247	Toshiba	BFR92AW	WB trs 1-4
2SC4248	Toshiba	BFR92AW	WB trs 1-4
2SC4315	Toshiba	BFG520/XR	WB trs 1-4
2SC4320	Toshiba	BFG520/XR	WB trs 1-4
2SC4321	Toshiba	BFQ67W	WB trs 1-4
2SC4325	Toshiba	BFS505	WB trs 1-4
2SC4394	Toshiba	PRF957	WB trs 1-4
2SC4536	NEC	BFQ19	WB trs 1-4
2SC4537	Renesas	BFR93AW	WB trs 1-4
2SC4592	Renesas	BFG520/XR	WB trs 1-4
2SC4593	Renesas	BFS520	WB trs 1-4
2SC4703	NEC	BFQ19	WB trs 1-4
2SC4784	Renesas	BFS505	WB trs 1-4
2SC4807	Renesas	BFQ18A	WB trs 1-4
2SC4842	Toshiba	BFG540W/XR	WB trs 1-4
2SC4899	Renesas	BFS505	WB trs 1-4
2SC4900	Renesas	BFG520/XR	WB trs 1-4
2SC4901	Renesas	BFS520	WB trs 1-4
2SC4988	Renesas	BFQ540	WB trs 1-4
2SC5011	NEC	BFG540W/XR	WB trs 1-4
2SC5012	NEC	BFG540W/XR	WB trs 1-4
2SC5065	Toshiba	PRF957	WB trs 1-4
2SC5085	Toshiba	PRF957	WB trs 1-4
2SC5087	Toshiba	BFG520/XR	WB trs 1-4
2SC5088	Toshiba	BFG540W/XR	WB trs 1-4
2SC5090	Toshiba	BFS520	WB trs 1-4
2SC5092	Toshiba	BFG520/XR	WB trs 1-4
2SC5095	Toshiba	BFS505	WB trs 1-4
2SC5107	Toshiba	BFS505	WB trs 1-4
2SC5463	Toshiba	BFQ67W	WB trs 1-4
2SC5593	Renesas	BFG410W	WB trs 5-7
2SC5594	Renesas	BFG425W	WB trs 5-7
2SC5623	Renesas	BFG410W	WB trs 5-7
2SC5624	Renesas	BFG425W	WB trs 5-7
2SC5631	Renesas	BFQ540	WB trs 1-4
2SJ105GR	IS	J177	FET
2SK163-K	Renesas	J113	FET
2SK163-L	Renesas	J113	FET
2SK163-M	Renesas	J113	FET
2SK163-N	Renesas	J113	FET
2SK210BL	Renesas	PMBFJ309	FET
2SK370BL	Renesas	J109	FET
2SK370GR	Renesas	J109	FET
2SK370V	Renesas	J109	FET
2SK381	Renesas	J113	FET
2SK43	Renesas	J113	FET
2SK435	Renesas	J113	FET
2SK508	Renesas	PMBFJ308	FET
3SK290	Renesas	BF998WR	FET
BA592	Infineon	BA591	BS diode
BA592	Infineon	BA591	BS diode
BA595	Infineon	BAP70-03	Pin diode
BA597	Infineon	BAP70-03	Pin diode
BA885	Infineon	BAP70-03	Pin diode
BA892	Infineon	BA891	BS diode
BA892	Infineon	BA891	BS diode
BA895	Infineon	BAP70-02	Pin diode
BAR14-1	Infineon	BAP70-03	Pin diode
BAR15-1	Infineon	BAP70-03	Pin diode
BAR16-1	Infineon	BAP70-03	Pin diode
BAR17	Infineon	BAP50-03	Pin diode
BAR60	Infineon	BAP50-03	Pin diode
BAR61	Infineon	BAP50-03	Pin diode
BAR63	Infineon	BAP63-03	Pin diode
BAR63-02L	Infineon	BAP63-02	Pin diode
BAR63-02V	Infineon	BAP63-02	Pin diode
BAR63-02W	Infineon	BAP63-02	Pin diode
BAR63-03W	Infineon	BAP63-03	Pin diode

Manufacturer Type	Manufacturer	Philips Type	Product Family
BAR63-05	Infineon	BAP63-05W	Pin diode
BAR63-05W	Infineon	BAP63-05W	Pin diode
BAR64-02V	Infineon	BAP64-02	Pin diode
BAR64-02W	Infineon	BAP64-02	Pin diode
BAR64-03W	Infineon	BAP64-03	Pin diode
BAR64-04	Infineon	BAP64-04	Pin diode
BAR64-04W	Infineon	BAP64-04W	Pin diode
BAR64-05	Infineon	BAP64-05	Pin diode
BAR64-05W	Infineon	BAP64-05W	Pin diode
BAR64-06	Infineon	BAP64-06	Pin diode
BAR64-06W	Infineon	BAP64-06W	Pin diode
BAR65-02V	Infineon	BAP65-02	Pin diode
BAR65-02W	Infineon	BAP65-02	Pin diode
BAR65-03W	Infineon	BAP65-03	Pin diode
BAR66	Infineon	BAP1321-04	Pin diode
BAR67-02W	Infineon	BAP1321-02	Pin diode
BAR67-03W	Infineon	BAP1321-03	Pin diode
BB304C	Renesas	BF1201WR	FET
BB304M	Renesas	BF1201R	FET
BB305C	Renesas	BF1201WR	FET
BB305M	Renesas	BF1201R	FET
BB403M	Renesas	BF909R	FET
BB501C	Renesas	BF1202WR	FET
BB501M	Renesas	BF1202R	FET
BB502C	Renesas	BF1202WR	FET
BB502M	Renesas	BF1202R	FET
BB503C	Renesas	BF1202WR	FET
BB503M	Renesas	BF1202R	FET
BB535	Infineon	BB149	Varicap
BB545	Infineon	BB149A	Varicap
BB555	Infineon	BB179B	Varicap
BB555	Infineon	BB179B	Varicap
BB565	Infineon	BB179	Varicap
BB601M	Renesas	BF1202	FET
BB639	Infineon	BB148	Varicap
BB639	Infineon	BB153	Varicap
BB640	Infineon	BB152	Varicap
BB641	Infineon	BB152	Varicap
BB659	Infineon	BB178	Varicap
BB659	Infineon	BB178	Varicap
BB664	Infineon	BB187	Varicap
BB664	Infineon	BB178	Varicap
BB664	Infineon	BB178	Varicap
BB669	Infineon	BB152	Varicap
BB814	Infineon	BB201	Varicap
BB831	Infineon	BB131	Varicap
BB833	Infineon	BB131	Varicap
BB835	Infineon	BB131	Varicap
BBY51	Infineon	BB141	Varicap
BBY51-03W	Infineon	BB142	Varicap
BBY53	Infineon	BB143	Varicap
BBY53-03W	Infineon	BB143	Varicap
BBY58-02V	Infineon	BB202	Varicap
BBY65	Infineon	BB202	Varicap
BBY66-05	Infineon	BB200	Varicap
BF1005S	Infineon	BF1105	FET
BF1009S	Infineon	BF1109	FET
BF1009SW	Infineon	BF1109WR	FET
BF2030	Infineon	BF1101	FET
BF2030R	Infineon	BF1101R	FET
BF2030W	Infineon	BF1101WR	FET
BF244A	IS	BF245A	FET
BF244B	IS	BF245B	FET
BF244C	IS	BF245C	FET
BF247A	IS	J108	FET
BF247B	IS	J108	FET
BF247C	IS	J108	FET
BF256A	IS	BF245A	FET
BF256B	IS	BF245B	FET
BF256C	IS	BF245C	FET
BF770A	Infineon	BFR93A	WB trs 1-4
BF771	Infineon	PBR951	WB trs 1-4
BF771W	Infineon	BFS540	WB trs 1-4
BF772	Infineon	BFG540	WB trs 1-4
BF775	Infineon	BFR92A	WB trs 1-4

Manufacturer Type	Manufacturer	Philips Type	Product Family
BF775A	Infineon	BFR92A	WB trs 1-4
BF775W	Infineon	BFR92AW	WB trs 1-4
BF851A	IS	BF861A	FET
BF851B	IS	BF861B	FET
BF851C	IS	BF861C	FET
BF994S	Vishay	BF994S	FET
BF996S	Vishay	BF996S	FET
BF998	Vishay	BF998	FET
BF998	Infineon	BF998	FET
BF998R	Vishay	BF998R	FET
BF998RW	Vishay	BF998WR	FET
BF998W	Infineon	BF998WR	FET
BFG135A	Infineon	BFG135	WB trs 1-4
BFG193	Infineon	BFG198	WB trs 1-4
BFG194	Infineon	BFG31	WB trs 1-4
BFG196	Infineon	BFG541	WB trs 1-4
BFG19S	Infineon	BFG97	WB trs 1-4
BFG235	Infineon	BFG135	WB trs 1-4
BFP180	Infineon	BFG505/X	WB trs 1-4
BFP181	Infineon	BFG67/X	WB trs 1-4
BFP182	Infineon	BFG67/X	WB trs 1-4
BFP183	Infineon	BFG520/X	WB trs 1-4
BFP183R	Infineon	BFG520/XR	WB trs 1-4
BFP193	Infineon	BFG540/X	WB trs 1-4
BFP193W	Infineon	BFG540W/XR	WB trs 1-4
BFP196W	Infineon	BFG540W/XR	WB trs 1-4
BFP280	Infineon	BFG505/X	WB trs 1-4
BFP405	Infineon	BFG410W	WB trs 5-7
BFP420	Infineon	BFG425W	WB trs 5-7
BFP450	Infineon	BFG480W	WB trs 5-7
BFP81	Infineon	BFG92A/X	WB trs 1-4
BFP93A	Infineon	BFG93A/X	WB trs 1-4
BFQ193	Infineon	BFQ540	WB trs 1-4
BFQ19S	Infineon	BFQ19	WB trs 1-4
BFR106	Infineon	BFR106	WB trs 1-4
BFR180	Infineon	BFR505	WB trs 1-4
BFR180W	Infineon	BFS505	WB trs 1-4
BFR181	Infineon	BFR520	WB trs 1-4
BFR181W	Infineon	BFS520	WB trs 1-4
BFR182	Infineon	PBR941	WB trs 1-4
BFR182W	Infineon	PRF947	WB trs 1-4
BFR183	Infineon	PBR951	WB trs 1-4
BFR183W	Infineon	PRF957	WB trs 1-4
BFR193	Infineon	PBR951	WB trs 1-4
BFR193W	Infineon	PRF957	WB trs 1-4
BFR35AP	Infineon	BFR92A	WB trs 1-4
BFR92AL	Motorola	BFR92A	WB trs 1-4
BFR92P	Infineon	BFR92A	WB trs 1-4
BFR92W	Infineon	BFR92AW	WB trs 1-4
BFR93A	Infineon	BFR93A	WB trs 1-4
BFR93AL	Motorola	BFR93A	WB trs 1-4
BFR93AW	Infineon	BFR93AW	WB trs 1-4
BFS17L	Motorola	BFS17	WB trs 1-4
BFS17P	Infineon	BFS17A	WB trs 1-4
BFS17W	Infineon	BFS17W	WB trs 1-4
BFS481	Infineon	BFM505	WB trs 1-4
BFS483	Infineon	BFM520	WB trs 1-4
BFT92	Infineon	BFT92	WB trs 1-4
BFT93	Infineon	BFT93	WB trs 1-4
BIC701C	Renesas	BF1105WR	FET
BIC701M	Renesas	BF1105R	FET
BIC702C	Renesas	BF1105WR	FET
BIC702M	Renesas	BF1105R	FET
BIC801M	Renesas	BF1105	FET
BSR111	IS	PMBFJ111	FET
BSR112	IS	PMBFJ112	FET
BSR113	IS	PMBFJ113	FET
BSR174	IS	PMBFJ174	FET
BSR175	IS	PMBFJ175	FET
BSR176	IS	PMBFJ176	FET
BSR177	IS	PMBFJ177	FET
CA2830	IS	BGR269	CATV RA
CA901	IS	BGX885N	CATV PPA
CA901A	IS	BGX885N	CATV PPA
CA922	IS	BGD885	CATV PD

Manufacturer Type	Manufacturer	Philips Type	Product Family
CA922A	IS	BGD885	CATV PD
CMY91	Infineon	BGA2022	MMIC
D5540185	IS	BGD502	CATV PD
D7540185	IS	BGD702	CATV PD
D7540200	IS	BGD704	CATV PD
D8640185	IS	BGD802	CATV PD
D8640250GT	IS	CGD914	CATV PD
D8640250GTH	IS	CGD923	CATV PD
D8740180GT	IS	CGD923	CATV PD
D8740200GT	IS	CGD923	CATV PD
FSD273TA	Skyworks	BB148	Varicap
FSD273TA	Skyworks	BB178	Varicap
FSD273TA	Skyworks	BB178	Varicap
HBFP0405	Agilent	BFG410W	WB trs 5-7
HBFP0420	Agilent	BFG425W	WB trs 5-7
HBFP0450	Agilent	BFG480W	WB trs 5-7
HSC277	Renesas	BA277	BS diode
HSMP3800	Agilent	BAP70-03	Pin diode
HSMP3802	Agilent	BAP50-04	Pin diode
HSMP3804	Agilent	BAP50-05	Pin diode
HSMP3810	Agilent	BAP50-03	Pin diode
HSMP3814	Agilent	BAP50-05	Pin diode
HSMP381B	Agilent	BAP50-03	Pin diode
HSMP381C	Agilent	BAP50-05	Pin diode
HSMP381F	Agilent	BAP64-05W	Pin diode
HSMP3820	Agilent	BAP1321-03	Pin diode
HSMP3822	Agilent	BAP1321-04	Pin diode
HSMP3830	Agilent	BAP64-03	Pin diode
HSMP3832	Agilent	BAP64-04	Pin diode
HSMP3833	Agilent	BAP64-06	Pin diode
HSMP3834	Agilent	BAP64-05	Pin diode
HSMP3860	Agilent	BAP50-03	Pin diode
HSMP3862	Agilent	BAP50-04	Pin diode
HSMP3864	Agilent	BAP50-05	Pin diode
HSMP386B	Agilent	BAP50-02	Pin diode
HSMP386E	Agilent	BAP50-04W	Pin diode
HSMP386L	Agilent	BAP50-05W	Pin diode
HSMP3880	Agilent	BAP51-03	Pin diode
HSMP3890	Agilent	BAP51-03	Pin diode
HSMP3892	Agilent	BAP64-04	Pin diode
HSMP3894	Agilent	BAP64-05	Pin diode
HSMP3895	Agilent	BAP51-02	Pin diode
HSMP389B	Agilent	BAP51-02	Pin diode
HSMP389C	Agilent	BAP64-04	Pin diode
HSMP389F	Agilent	BAP51-05W	Pin diode
HVB14S	Renesas	BAP50-04W	Pin diode
HVC131	Renesas	BAP65-02	Pin diode
HVC132	Renesas	BAP51-02	Pin diode
HVC200A	Renesas	BB178	Varicap
HVC200A	Renesas	BB178	Varicap
HVC200A	Renesas	BB187	Varicap
HVC202A	Renesas	BB179	Varicap
HVC202B	Renesas	BB179B	Varicap
HVC202B	Renesas	BB179B	Varicap
HVC300A	Renesas	BB182	Varicap
HVC300A	Renesas	BB182	Varicap
HVC300B	Renesas	BB182	Varicap
HVC306A	Renesas	BB187	Varicap
HVC306B	Renesas	BB187	Varicap
HVC355	Renesas	BB145	Varicap
HVC355B	Renesas	BB145B	Varicap
HVC359	Renesas	BB202	Varicap
HVC363A	Renesas	BB178	Varicap
HVC363A	Renesas	BB178	Varicap
HVC369B	Renesas	BB143	Varicap
HVC376B	Renesas	BB198	Varicap
HVC376B	Renesas	BB202	Varicap
HVD132	Renesas	BAP51-02	Pin diode
HVU131	Renesas	BAP65-03	Pin diode
HVU132	Renesas	BAP51-03	Pin diode
HVU202(A)	Renesas	BB149	Varicap
HVU202(A)	Renesas	BB149A	Varicap
HVU300A	Renesas	BB152	Varicap
HVU307	Renesas	BB148	Varicap
HVU315	Renesas	BB148	Varicap

Manufacturer Type	Manufacturer	Philips Type	Product Family
HVU316	Renesas	BB131	Varicap
HVU363A	Renesas	BB148	Varicap
HVU363A	Renesas	BB153	Varicap
HVU363B	Renesas	BB148	Varicap
INA-51063	Agilent	BGA2001	MMIC
J270	IS	J177	FET
J308	IS	J108	FET
J309	IS	J109	FET
J310	IS	J110	FET
JDP2S01E	Toshiba	BAP65-02	Pin diode
JDP2S01U	Toshiba	BAP65-03	Pin diode
JDP2S02T	Toshiba	BAP63-02	Pin diode
JDP2S04E	Toshiba	BAP50-02	Pin diode
KV1470	Toko	BB200	Varicap
KV1835E	Toko	BB199	Varicap
MA2S077	IS	BA277	BS diode
MA2S357	Matsushita	BB187	Varicap
MA2S357	Matsushita	BB178	Varicap
MA2S357	Matsushita	BB178	Varicap
MA2S372	Matsushita	BB179	Varicap
MA2S374	Matsushita	BB182	Varicap
MA2SV01	Renesas	BB202	Varicap
MA357	Matsushita	BB153	Varicap
MA366	Matsushita	BB148	Varicap
MA368	Matsushita	BB131	Varicap
MA372	Matsushita	BB149	Varicap
MA372	Matsushita	BB149A	Varicap
MA377	Matsushita	BB141	Varicap
MA4CP101A	Matsushita	BAP65-03	Pin diode
MA4P274-1141	Matsushita	BAP51-03	Pin diode
MA4P275-1141	Matsushita	BAP65-03	Pin diode
MA4P275CK-287	Matsushita	BAP65-05	Pin diode
MA4P277-1141	Matsushita	BAP70-03	Pin diode
MA4P278-287	Matsushita	BAP70-03	Pin diode
MA4P789-1141	Matsushita	BAP1321-03	Pin diode
MA4P789ST-287	Matsushita	BAP1321-04	Pin diode
MC7712	IS	BGY785A	CATV PPA
MC7716	IS	BGY787	CATV PPA
MC7722	IS	BGY785A	CATV PPA
MC7726	IS	BGY787	CATV PPA
MC7833	IS	CGY887A	CATV PPA/HG
MC7852	IS	BGY885A	CATV PPA
MC7856	IS	CGY887	CATV PPA
MC7862	IS	CGD923	CATV PD
MC7866	IS	BGD816L	CATV PD
MHW1224	Motorola/Freescale	BGY67	CATV RA
MHW1244	Motorola/Freescale	BGY67A	CATV RA
MHW1303LA	Motorola/Freescale	BGR269	CATV RA
MHW1304LA	Motorola/Freescale	BGY68	CATV RA
MHW5182A	Motorola/Freescale	BGY585A	CATV PPA
MHW5185B	Motorola/Freescale	BGD502	CATV PD
MHW5222A	Motorola/Freescale	BGY587	CATV PPA
MHW5272A	Motorola/Freescale	BGY587B	CATV PPA/HG
MHW5342A	Motorola/Freescale	BGY588N	CATV PPA/HG
MHW5342T	Motorola/Freescale	BGY588N	CATV PPA/HG
MHW6182	Motorola/Freescale	BGY585A	CATV PPA
MHW6182-6	Motorola/Freescale	BGY685A	CATV PPA
MHW6182T	Motorola/Freescale	BGY585A	CATV PPA
MHW6185B	Motorola/Freescale	BGD502	CATV PD
MHW6185T	Motorola/Freescale	BGD502	CATV PD
MHW6205	Motorola/Freescale	BGD704	CATV PD
MHW6222	Motorola/Freescale	BGY587	CATV PPA
MHW6222B	Motorola/Freescale	BGY687	CATV PPA
MHW6222T	Motorola/Freescale	BGY587	CATV PPA
MHW6272	Motorola/Freescale	BGY587B	CATV PPA/HG
MHW6272T	Motorola/Freescale	BGY587B	CATV PPA/HG
MHW6342	Motorola/Freescale	BGY588N	CATV PPA/HG
MHW6342T	Motorola/Freescale	BGY588N	CATV PPA/HG
MHW7182B	Motorola/Freescale	BGY785A	CATV PPA
MHW7185C	Motorola/Freescale	BGD712	CATV PD
MHW7205C	Motorola/Freescale	BGD714	CATV PD
MHW7222	Motorola/Freescale	BGY787	CATV PPA
MHW7222A	Motorola/Freescale	BGY787	CATV PPA
MHW7222B	Motorola/Freescale	BGY787	CATV PPA
MHW7222B	Motorola/Freescale	BGY787	CATV PPA

Manufacturer Type	Manufacturer	Philips Type	Product Family
MHW7292	Motorola/Freescale	BGE787B	CATV PPA/HG
MHW7292A	Motorola/Freescale	BGE787B	CATV PPA/HG
MHW7342	Motorola/Freescale	BGE788	CATV PPA/HG
MHW8142	Motorola/Freescale	BGY883	CATV PPA
MHW8182B	Motorola/Freescale	BGY885A	CATV PPA
MHW8185	Motorola/Freescale	BGD902	CATV PD
MHW8185L	Motorola/Freescale	BGD902L	CATV PD
MHW8202B	Motorola/Freescale	BGY885B	CATV PPA
MHW8205	Motorola/Freescale	BGD904	CATV PD
MHW8205L	Motorola/Freescale	BGD904L	CATV PD
MHW8272A	Motorola/Freescale	CGY887B	CATV PPA/HG
MHW8292	Motorola/Freescale	BGY887B	CATV PPA/HG
MHW9182B	Motorola/Freescale	BGY1085A	CATV PPA
MHW9187	Motorola/Freescale	CGD923	CATV PD
MHW9188	Motorola/Freescale	CGD923	CATV PD
MHWJ5272A	Motorola/Freescale	BGY587B	CATV PPA/HG
MHWJ7185A	Motorola/Freescale	BGD712	CATV PD
MHWJ7205A	Motorola/Freescale	BGD714	CATV PD
MHWJ7292	Motorola/Freescale	BGE787B	CATV PPA/HG
MHWJ9182	Motorola/Freescale	BGY1085A	CATV PPA
MMBF4391	Motorola	PMBF4391	FET
MMBF4392	Motorola	PMBF4392	FET
MMBF4393	Motorola	PMBF4393	FET
MMBF4860	Motorola	PMBFJ112	FET
MMBF5484	Motorola	BFR31	FET
MMBFJ113	Motorola	PMBFJ113	FET
MMBFJ174	Motorola	PMBFJ174	FET
MMBFJ175	Motorola	PMBFJ175	FET
MMBFJ176	Motorola	PMBFJ176	FET
MMBFJ177	Motorola	PMBFJ177	FET
MMBFJ308	Motorola	PMBFJ308	FET
MMBFJ309	Motorola	PMBFJ309	FET
MMBFJ310	Motorola	PMBFJ310	FET
MMBFU310	Motorola	PMBFJ310	FET
MMBR5031L	Motorola	BFS17	WB trs 1-4
MMBR5179L	Motorola	BFS17A	WB trs 1-4
MMBR571L	Motorola	PBR951	WB trs 1-4
MMBR901L	Motorola	BFR92A	WB trs 1-4
MMBR911L	Motorola	BFR93A	WB trs 1-4
MMBR920L	Motorola	BFR93A	WB trs 1-4
MMBR931L	Motorola	BFT25A	WB trs 1-4
MMBR941BL	Motorola	PBR941	WB trs 1-4
MMBR941L	Motorola	PBR941	WB trs 1-4
MMBR951AL	Motorola	PBR951	WB trs 1-4
MMBR951L	Motorola	PBR951	WB trs 1-4
MMBV105GLT1	ON Semicond.	BB156	Varicap
MMBV109LT1	ON Semicond.	BB148	Varicap
MPF102	IS	BF245A	FET
MPF970	IS	J174	FET
MPF971	IS	J176	FET
MRF577	Motorola	PRF957	WB trs 1-4
MRF5811L	Motorola	BFG93A/X	WB trs 1-4
MRF917	Motorola	BFQ67W	WB trs 1-4
MRF927	Motorola	BFS25A	WB trs 1-4
MRF9411L	Motorola	BFG520/X	WB trs 1-4
MRF947	Motorola	BFS520	WB trs 1-4
MRF947A	Motorola	PRF947	WB trs 1-4
MRF9511L	Motorola	BFG540/X	WB trs 1-4
MRF957	Motorola	PRF957	WB trs 1-4
MT4S34U	Toshiba	BFG410W	WB trs 5-7
PRF947B	Motorola	PRF947	WB trs 1-4
PZFJ108	IS	J108	FET
PZFJ109	IS	J109	FET
PZFJ110	IS	J110	FET
R0605250L	IS	BGY66B	CATV RA
R0605300L	IS	BGY68	CATV RA
R0605300L	IS	BGY68	CATV RA
R2005240	IS	BGY67A	CATV RA
R2005240	IS	BGY67A	CATV RA
R2005350L	IS	BGR269	CATV RA
RN142G	Rohm	BAP1321-03	Pin diode
RN142S	Rohm	BAP1321-02	Pin diode
RN731V	Rohm	BAP50-03	Pin diode
RN739D	Rohm	BAP50-04	Pin diode
RN739F	Rohm	BAP50-04W	Pin diode

Manufacturer Type	Manufacturer	Philips Type	Product Family
S505T	Vishay	BF1101	FET
S505TR	Vishay	BF1101R	FET
S505TRW	Vishay	BF1101WR	FET
S5540220	IS	BGY587	CATV PPA
S595T	Vishay	BF1105	FET
S595TR	Vishay	BF1105R	FET
S595TRW	Vishay	BF1105WR	FET
S7540185	IS	BGY785A	CATV PPA
S7540215	IS	BGY787	CATV PPA
S8740190	IS	BGD812	CATV PD
S8740220	IS	BGD814	CATV PD
S8740230	IS	BGD816L	CATV PD
S949T	Vishay	BF1109	FET
S949TR	Vishay	BF1109R	FET
S949TRW	Vishay	BF1109WR	FET
S974T	Vishay	BF1109	FET
S974TR	Vishay	BF1109R	FET
S974TRW	Vishay	BF1109WR	FET
SMP1302-004	Skyworks	BAP50-05	Pin diode
SMP1302-005	Skyworks	BAP50-04	Pin diode
SMP1302-011	Skyworks	BAP50-03	Pin diode
SMP1302-074	Skyworks	BAP50-05W	Pin diode
SMP1302-075	Skyworks	BAP50-04W	Pin diode
SMP1302-079	Skyworks	BAP50-02	Pin diode
SMP1304-001	Skyworks	BAP70-03	Pin diode
SMP1304-011	Skyworks	BAP70-03	Pin diode
SMP1307-001	Skyworks	BAP70-03	Pin diode
SMP1307-011	Skyworks	BAP70-03	Pin diode
SMP1320-004	Skyworks	BAP65-05	Pin diode
SMP1320-011	Skyworks	BAP65-03	Pin diode
SMP1320-074	Skyworks	BAP65-05W	Pin diode
SMP1321-001	Skyworks	BAP1321-03	Pin diode
SMP1321-005	Skyworks	BAP1321-04	Pin diode
SMP1321-011	Skyworks	BAP1321-03	Pin diode
SMP1321-075	Skyworks	BAP1321-04	Pin diode
SMP1321-079	Skyworks	BAP1321-02	Pin diode
SMP1322-004	Skyworks	BAP65-05	Pin diode
SMP1322-011	Skyworks	BAP65-03	Pin diode
SMP1322-074	Skyworks	BAP65-05W	Pin diode
SMP1322-079	Skyworks	BAP65-02	Pin diode
SMP1340-011	Skyworks	BAP63-03	Pin diode
SMP1340-079	Skyworks	BAP63-02	Pin diode
SMP1352-011	Skyworks	BAP64-03	Pin diode
SMP1352-079	Skyworks	BAP64-02	Pin diode
SMV1235-004	Skyworks	BB181	Varicap
SMV1236-004	Skyworks	BB156	Varicap
SMV1263-079	Skyworks	BB143	Varicap

Manufacturer Type	Manufacturer	Philips Type	Product Family
SST111	IS	PMBFJ111	FET
SST112	IS	PMBFJ112	FET
SST113	IS	PMBFJ113	FET
SST174	IS	PMBFJ174	FET
SST175	IS	PMBFJ175	FET
SST176	IS	PMBFJ176	FET
SST177	IS	PMBFJ177	FET
SST201	IS	BFT46	FET
SST202	IS	BFR31	FET
SST203	IS	BFR30	FET
SST308	IS	PMBFJ308	FET
SST309	IS	PMBFJ309	FET
SST310	IS	PMBFJ310	FET
SST4391	IS	PMBF4391	FET
SST4392	IS	PMBF4392	FET
SST4393	IS	PMBF4393	FET
SST4856	IS	BSR56	FET
SST4857	IS	BSR57	FET
SST4859	IS	BSR56	FET
SST4860	IS	BSR57	FET
SST4861	IS	BSR58	FET
SVC201SPA	Sanyo	BB187	Varicap
TMPF4091	IS	PMBF4391	FET
TMPF4092	IS	PMBF4392	FET
TMPF4093	IS	PMBF4393	FET
TMPF4391	IS	PMBF4391	FET
TMPF4392	IS	PMBF4392	FET
TMPF4393	IS	PMBF4393	FET
TMPFB246A	IS	BSR56	FET
TMPFB246B	IS	BSR57	FET
TMPFB246C	IS	BSR58	FET
TMPFJ111	IS	PMBFJ111	FET
TMPFJ112	IS	PMBFJ112	FET
TMPFJ113	IS	PMBFJ113	FET
TMPFJ174	IS	PMBFJ174	FET
TMPFJ175	IS	PMBFJ175	FET
TMPFJ176	IS	PMBFJ176	FET
TMPFJ177	IS	PMBFJ177	FET
TSDF54040	Vishay	BF1102	FET
uPC2709	NEC	BGA2709	MMIC
uPC2711	NEC	BGA2711	MMIC
uPC2712	NEC	BGA2712	MMIC
uPC2745	NEC	BGA2001	MMIC
uPC2746	NEC	BGA2001	MMIC
uPC2748	NEC	BGA2748	MMIC
uPC2771	NEC	BGA2771	MMIC
uPC8112	NEC	BGA2022	MMIC

4.2 Cross-references: Philips discontinued types versus Philips replacement types

In alphabetical order of Philips discontinued type

Abbreviations:

BS diode	Band Switch Diode
CATV	Community Antenna Television System
FET	Field Effect Transistor
Varicap	Varicap Diode
WB trs	Wideband Transistor
OM	Optical Module

Philips discontinued type	Product family	Philips replacement type
BA277-01	BS diode	BA277
BAP142L	Pin diode	BAP142LX
BAP51-01	Pin diode	BAP51LX
BAP51L	Pin diode	BAP51LX
BAP55L	Pin diode	BAP55LX
BB140-01	Varicap	BB140LX
BB140L	Varicap	BB140LX
BB145B-01	Varicap	BB145B
BB151	varicap	BB187
BB157	varicap	BB135
BB178L	Varicap	BB178LX
BB179BL	Varicap	BB179BLX
BB179L	Varicap	BB179LX
BB181L	Varicap	BB181LX
BB182B	Varicap	BB182
BB182B	Varicap	BB182
BB182L	Varicap	BB182LX
BB187L	Varicap	BB187LX
BB190	Varicap	BB149
BB202L	Varicap	BB202LX
BBY42	Varicap	BBY40
BF1203	FET	BF1203
BF689K	WB trs	BFS17
BF763	WB trs	BFS17
BF851A	FET	BF861A
BF851A	FET	BF861A
BF851B	FET	BF851B
BF851B	FET	BF851B
BF851C	FET	BF861C
BF851C	FET	BF861C
BF992/01	FET	BF992
BFC505	WB trs	BFM505
BFC520	WB trs	BFM520
BFET505	WB trs	BFM505
BFET520	WB trs	BFM520
BFG17A	WB trs	BFS17A
BFG197	WB trs	BFG198
BFG197/X	WB trs	BFG198
BFG25AW/XR	WB trs	BFG25AW/X
BFG410W/CA	WB trs	BFG410W
BFG425W/CA	WB trs	BGF425W
BFG425W/CA	WB trs	BGF425W
BFG505/XR	WB trs	BFG505/X
BFG505W/XR	WB trs	BFG505W/X
BFG520W/XR	WB trs	BFG520W/X
BFG590/XR	WB trs	BFG590/X
BFG590W	WB trs	BFG590W/X
BFG590W/XR	WB trs	BFG590W/X
BFG67/XR	WB trs	BFG67
BFG92A	WB trs	BFG92A/X
BFG92A/XR	WB trs	BFG92A/X
BFG93A/XR	WB trs	BFG93A/X
BFR92	WB trs	BFR92A
BFR92AR	WB trs	BFR92A
BFR92AT	WB trs	BFR92AW
BFR93	WB trs	BFR92A
BFR93AT	WB trs	BFR93AW
BFR93R	WB trs	BFR93
BFU510	WB trs	CFH705W
BFU540	WB trs	CFH705W
BGA2031	WB trs	BGA2031/1
BGD102/02	CATV	BGD502
BGD102/04	CATV	BGD502

Philips discontinued type	Product family	Philips replacement type
BGD104	CATV	BGD704
BGD104/04	CATV	BGD704
BGD502/01	CATV	BGD502
BGD502/01	CATV	BGD502
BGD502/01	CATV	BGD502
BGD502/01	CATV	BGD502
BGD502/03	CATV	BGD502
BGD502/03	CATV	BGD502
BGD502/05	CATV	BGD502
BGD502/07	CATV	BGD502
BGD502/6M	CATV	BGD702
BGD502/C7	CATV	BGD502
BGD502/R	CATV	BGD502
BGD504	CATV	BGD704
BGD504/01	CATV	BGD704
BGD504/02	CATV	BGD704
BGD504/09	CATV	BGD704
BGD602	CATV	BGD702
BGD602/02	CATV	BGD702
BGD602/07	CATV	BGD702
BGD602/09	CATV	BGD702
BGD602/14	CATV	BGD702
BGD602D	CATV	BGD712
BGD702D	CATV	BGD712
BGD702D/08	CATV	BGD712
BGD704/01	CATV	BGD704
BGD704/07S	CATV	BGD704
BGD704/S9	CATV	BGD704
BGD704N	CATV	BGD714
BGD802/09	CATV	BGD802
BGD802N	CATV	BGD812
BGD802N	CATV	BGD812
BGD802N/07	CATV	BGD812
BGD802N/07	CATV	BGD812
BGD804N	CATV	BGD814
BGD804N	CATV	BGD814
BGD804N/02	CATV	BGD814
BGD804N/02	CATV	BGD814
BGD902/07	CATV	BGD902
BGD904/02	CATV	BGD904
BGD904/07	CATV	BGD904
BGD906/02	CATV	BGD906
BGE67BO	CATV	BGO387
BGE67BO	CATV	BGO387
BGE847BO	CATV	BGO827
BGE847BO	CATV	BGO827
BGE847BO	CATV	BGO827
BGE847BO/FC	CATV	BGO827/FC0
BGE847BO/FC0	CATV	BGO827/FC0
BGE847BO/FC0	CATV	BGO827/FC0
BGE847BO/FC1	CATV	BGO827/FC0
BGE847BO/SC	CATV	BGO827/SC0
BGE847BO/SC0	CATV	BGO827/SC0
BGE847BO/SC0	CATV	BGO827/SC0
BGE887BO	CATV	BGO827
BGE887BO/FC	CATV	BGO827/FC0
BGE887BO/FC1	CATV	BGO827/FC0
BGE887BO/SC	CATV	BGO827/SC0
BGO747/SC0	CATV	BGO747
BGO847/01	CATV	BGO847
BGO847/01	CATV	BGO847
BGO847/FC0	CATV	BGO827/FC0
BGO847/FC0	CATV	BGO827/FC0
BGO847/FC01	CATV	BGO827/FC0

Philips discontinued type	Product family	Philips replacement type
BGO847/FC01	CATV	BGO827/FC0
BGO847/SC0	CATV	BGO827/SC0
BGQ34/01	WB	BFG35
BGU2003	WB trs	BGA2003
BGX885/02	CATV	BGX885N
BGY1085A/07	CATV	BGY1085A
BGY584A	CATV	BGY585A
BGY585A/01	CATV	BGY585A
BGY586	CATV	BGY587
BGY586/05	CATV	BGY587
BGY587/01	CATV	BGY587
BGY587/01	CATV	BGY587
BGY587/02	CATV	BGY587
BGY587/02	CATV	BGY587
BGY587/07	CATV	BGY587
BGY587/09	CATV	BGY587
BGY587B/01	CATV	BGY587B
BGY587B/02	CATV	BGY587B
BGY587B/09	CATV	BGY587B
BGY588	CATV	BGY588N
BGY588/04	CATV	BGY588N
BGY66B/04	CATV	BGY66B
BGY67/04	CATV	BGY67
BGY67/09	CATV	BGY67
BGY67/14	CATV	BGY67
BGY67/19	CATV	BGY67
BGY67A/04	CATV	BGY67A
BGY67A/14	CATV	BGY67A
BGY67BO	CATV	BGO387
BGY68/01	CATV	BGY68
BGY685A/07	CATV	BGY685A
BGY685AD	CATV	BGY785A
BGY685AD	CATV	BGY785A
BGY685AL	CATV	BGY785A
BGY687/07	CATV	BGY687
BGY687/14	CATV	BGY687
BGY687B	CATV	BGE787B
BGY687B/02	CATV	BGE787B
BGY785A/07	CATV	BGY785A
BGY785A/09	CATV	BGY785A
BGY785AD	CATV	BGY785A
BGY785AD/06	CATV	BGY785A
BGY785AD/8M	CATV	BGY885A
BGY785AD/8M	CATV	BGY885A
BGY787/02	CATV	BGY787
BGY787/07	CATV	BGY787
BGY787/09	CATV	BGY787
BGY847BO	CATV	BGO827
BGY847BO/SC	CATV	BGO827/SC0
BGY84A	CATV	BGY585A

Philips discontinued type	Product family	Philips replacement type
BGY84A/04	CATV	BGY585A
BGY84A/05	CATV	BGY585A
BGY85	CATV	BGY585A
BGY85A	CATV	BGY585A
BGY85A/04	CATV	BGY585A
BGY85A/05	CATV	BGY585A
BGY85H/01	CATV	BGY585A
BGY86	CATV	BGY587
BGY86/05	CATV	BGY587
BGY87	CATV	BGY587
BGY87/J1	CATV	BGY587
BGY87B	CATV	BGY587B
BGY88	CATV	BGY588N
BGY88/04	CATV	BGY588N
BGY88/04	CATV	BGY588N
BGY88/07	CATV	BGY588N
BGY887/02	CATV	BGY887
BGY887BO	CATV	BGO827
BGY887BO/FC	CATV	BGO827/FC0
BGY887BO/FC1	CATV	BGO827/FC0
BGY887BO/SC	CATV	BGO827/SC0
ON4520/09	CATV	BGY687
ON4520/2	CATV	BGY687
ON4594/M5	CATV	BGY585A
ON4749	CATV	BGY588N
ON4749	CATV	BGY588N
ON4831-2	CATV	BGY885A
ON4869	CATV	BGY587
ON4876	CATV	BGY1085A
ON4890	CATV	BGD712
ON4890	CATV	BGD712
ON4990	CATV	BGD885
OQ2545	OM	TZA3011
OQ2545B	OM	TZA3011
PMBT3640/AT	WB trs	BFS17
PN4392	FET	PMBF4392
PN4393	FET	PMBF4393
SA5223	OM	TZA3036
TZA3001	OM	TZA3047
TZA3001	OM	TZA3047
TZA3023	OM	TZA3026
TZA3031	OM	TZA3047
TZA3031	OM	TZA3047
TZA3033	OM	TZA3036
TZA3041	OM	TZA3047
TZA3042B	OM	TZA3047
TZA3043	OM	TZA3046
TZA3043B	OM	TZA3046
XSA5223	OM	TZA3036
XSA5223	OM	TZA3036

5. High performance miniature BAW filters and duplexers

Bulk Acoustic Wave (BAW) filters and duplexers for Front-End Modules and Cellular Phones

Bulk Acoustic Wave filters provide high performance, ultra small size solutions for next generation integrated cellular phones. Together with Philips patented Chip Scale Package this allows for seamless integration of BAW filters into RF front-end modules.

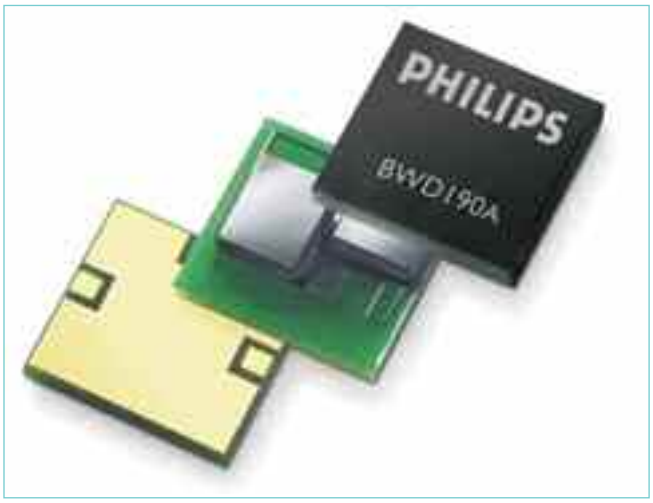

Features

- High performance BAW filters and duplexers
  - Low insertion loss
  - High stopband rejections/isolations
  - Low temperature drift
  - Superior power handling
  - Enhanced ESD robustness
- Ultra-small, Philips-patented Chip Scale Package
  - Ultra-small footprint (as small as 1.5mm^2)
  - Very low profile (height < 450 µm after solder reflow)
- Flip Chip assembly

Customer benefits

- Optimized for:
  - 1900 MHz US PCS (W-)CDMA
  - UMTS
  - Bluetooth/WLAN
- Easy package-less chip scale integration into RF front-end module
- Integrated balun option via Philips passive integration process technology
- Reduced PCB implementation size
- Ideal for high frequency applications
- Superior performance in very small size

The Philips series of high-performance Bulk Acoustic Wave (BAW) filters and duplexers is optimized for (W-)CDMA/GSM cellular phones. Available in Philips-patented Chip Scale Packaging (CSP), they provide superior performance in an ultra-small size.

Compared to Surface Acoustic Wave (SAW) filters, BAW typically offers superior power handling, enhanced ESD robustness, smaller size, reduced in-band insertion loss and increased steepness of the filter skirts in lower and upper transition bands. BAW filters also offer less center frequency drift versus temperature change and are more suitable for applications at frequencies ranging from 1 to 20 GHz.

High-performance BAW filters & Duplexers

Designed for easy integration into front-end modules and delivering low insertion loss and high selectivity, Philips BAW filters and duplexers support receive (Rx) and transmit (Tx) applications in (W-)CDMA and GSM phones:

- US PCS (1900 MHz)
  - BWT190(A) high-rejection Tx interstage filter
  - BWD190(A) duplexer
- UMTS (2100MHz)
  - BWD210(A) BAW duplexer
- Bluetooth/WLAN antenna filter (2400 MHz)
  - BWR240(A) antenna filter

Higher integration in an ultra-small, package-less chip scale format

Using the patented Chip Scale Package technique, Philips is able to maximize performance while minimizing footprint. The Chip Scale Packaged Tx BAW filters for US PCS duplexer, for example, are as small as 1.9x1.4 mm^2.
The BAW devices are typically less than 450 µm in height after solder reflow and are suitable for flip-chip assembly.

Philips Semiconductors BAW devices

Type	Description	Freq. (MHz)	Size (mm²) Chip Scale	Molded
BWT190(A)	PCS Tx	1900	1.7 x 1.0	2.0 x 1.6
	interstage filter			
BWD190(A)	PCS duplexer	1900	Tx: 1.9 x 1.4 Rx: 2.2 x 1.3	3.8 x 3.8
BWD210(A)	UMTS duplexer	2100	Tx: 1.9 x 1.6	3.8 x 3.8
			Rx: 2.2 x 1.5	
BWR240(A)	Bluetooth/	2400	1.5 x 1.0	n.a.
	WLAN filter			

Electrical characteristics of the BWD190A, T_j = 25°C, Z_0 = 50Ω

Parameter	Band	Frequency (MHz)	Min (dB)	Max (dB)
Insertion Loss	Tx	1850 – 1910	-	3.5
	Rx	1930 – 1990	-	3.8
Ripple	Tx		-	2
Rejection			-	-
Tx to Antenna	Rx		41	-
Rx to Antenna	Tx		50	-
Return Loss	Tx		8	-
	Rx		8	-
	Antenna		8	-
Isolation (Tx – Rx)	Tx		53	-
	Rx		45	-

Passband Characteristics of Duplexer BWD190A

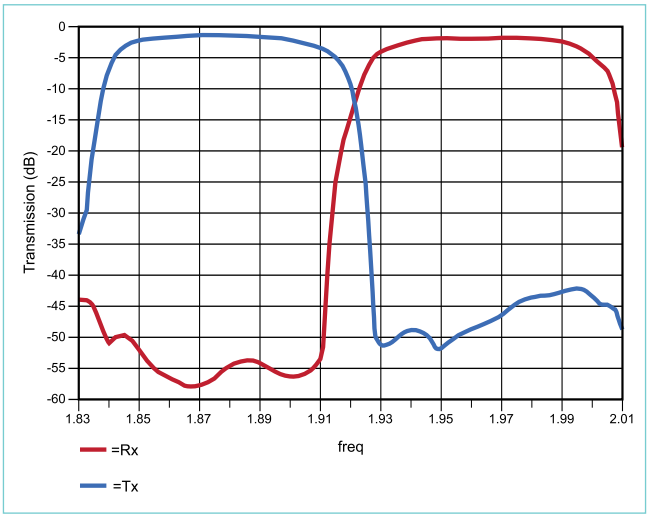

6. Satellite outdoor unit (LNB)

One-stop shop for low-noise block down converter designs

Helping simplify your supply chain, Philips Semiconductors meets all your hardware needs for low-noise block down converter (LNB) designs. Our high-quality components are finely tuned to work together seamlessly for the best performance. In addition, a wide choice of types ensures maximum design freedom.

Key benefits:

- Complete one-stop shop for LNB designs
- Fully optimized, high-performance components
- Full system and application support available
- Reliable, high-volume supply
- Easy-to-use, industry-standard packages
- Simple, flexible supply chain

Featured products

- CFH70x GaAs pHEMT LNAs
- BFG424F bipolar wideband transistor oscillator
- BGA27xx MMIC IF amplifiers
- BGM1420 4x2 switch
- BGM101x MMIC output IF amplifiers

The low-noise block down converter (LNB) or outdoor unit (ODU) plays a vital role in delivering satellite TV signals to consumers. And Philips offers the complete range of components required to build high-performance LNB systems.
Our portfolio covers everything from gallium-arsenide (GaAs) pHEMTs for the low-noise amplifier (LNA) stages to silicon monolithic microwave ICs (MMICS) for the output IF amplifiers – and everything in between. All fully optimized to work together to deliver the best performance.

All our LNB components are supplied in easy-to-use industry-standard packages, making system assembly simpler, cheaper and quicker. And full design support is available to help cut time-to-market even further. Our one-stop shop range greatly simplifies your supply chain and logistics, and gives you the reassurance of reliable high-volume supply.

CFH70x GaAs LNAs (in development)

The CFH70x pHEMT family is fabricated using GaAs process technology to deliver extremely low noise and very high gain. It is supplied in the easy-to-use SOT343FP plastic 4-pin SMD package. CFH70x pHEMTs are ideal solutions for the mixer and both LNA stages in satellite LNB converters.

Key features

- Low noise
- High gain
- Compact flat-lead SOT343FP package simplifies assembly

pHEMT GaAs transistors

Type	@		@ 12GHz		Limits		
	Vds (V)	Id	NF (dB)	Gain* (dB)	Vds (V)	Id (mA)	
CFH705F	2	10	**0.55**	**11.5**	4	70	2nd stage LNAs, also for mixer
CFH703F	2	10	**0.35**	**13.5**	4	70	1st stage LNAs

Notes: * Ga = associated gain

BFG424F bipolar oscillator

The BFG424F is an NPN double polysilicon wideband transistor with a buried layer for low-voltage applications. Housed in an easy-to-use SOT343F package, it features very high gain, low noise, low feedback capacitance and a high transition frequency (25 GHz).

Key features

- Stable phase noise over temperature performance
- Compact flat-lead SOT343F package simplifies assembly
- Free oscillations at all LO frequencies

Product overview

BFG424F															
V_{CBO} (V)	V_{CEO} (V)	I_C (mA)	P_{tot} (mW)	h_{FE} (dB)	C_{re} (fF)	fT (GHz)	G_{max} (dB)	Noise (dB)	Phase noise @ 13.85GHz (dBc)			Phase noise @ 14.35GHz (dBc)		
									25°C	35°C	65°C	25°C	35°C	65°C
10	4.5	30	135	120	95	25	20	1.2	-94.68			-95.68		

BGA27xx and BGM101x silicon MMIC IF amplifiers

MMICs integrate several components onto a single chip to cut component count and simplify design. They deliver high gain and low noise, and automatically compensate for temperature and process variations. Our BGA27xx and BGM101x families include a range of innovative products such as low-current and low-voltage options. They are supplied in the compact, SOT363 package for easy system integration.

Features

- Wide range of options for maximum design flexibility
- Variety of gain slopes

Product overview

BGA27xx & BGM10xx IF amplifiers in SOT363 6 pin SMD package														
Type	@		fu	@1GHz				Gain(dB) @				Limits		
	Vs (V)	Is (mA)	@-3dB (mA)	NF (dB)	Psat (dbm)	Gain (dB)	P1dB (dbm)	OIP3 (dbm)	100 MHz	2.2 Hz	2.6 Hz	3.0 GHz	Vs (V)	Is (mA)
BGA2709	5	23.5	2.8	4.0	**12.5**	**22.7**	8.3	24	22.6	22.7	22	21.1	6	35
BGA2712	5	12.6	2.8	3.9	4.8	21.3	0	12	20.9	21.9	20.8	18.6	6	25
BGA2715	5	**4.3**	3.3	**2.6**	-4	21.7	-8	2.3	13.3	23.3	22.1	20.1	6	8
BGA2716	5	**15.9**	**3.2**	5.3	**11.6**	**22.9**	**8.9**	**22.2**	**22.1**	**22.8**	**22.1**	**20.8**	6	30
BGM1013	5	27.5	2.1	4.6	**14**	**35.5**	**13**	**22.7**	**35.2**	**31.8**	**29.7**	**26.1**	6	35
BGM1011	5	25.5	2.9	4.7	**13.8**	**30**	**12.2**	**23**	**25**	**37**	**32**	**28**	6	35
BGM1012	3	**14.6**	**3.6**	4.8	9.7	20.1	**6**	17.8	**19.5**	**20.4**	**19.9**	**18.7**	4	30
BGM1014	5	**21**	2.7	4.6	**13.5**	32.2	12.2	22	31.5	34	32	28	6	30
BGA2715 / BGA 2716: Low current types								BGM1013 / BGM1011 / BGM1012 / BGM1014: Optimised & high slope types						

BGM1420 4x2 switch (in development)

The BGM1420 is a low-cost MMIC 4x2 amplifying IF switch matrix with an internal matching circuit. Supplied in a 24-pin HVQFN package, it greatly simplifies board design while integrated pre-amplifiers provide further cost and space savings. It delivers outstanding performance (21 mA supply current, flat 13 dB gain, minimum channel isolation of 33 dB), providing the flexibility to optimize gain performance with external amplifier in output stage.

Key features

- One part replaces four input stage IF amplifiers and switch
- Simplifies designs
- High performance

Product overview

BGM1420 in HVQFN24 24 pin package												
Type	@		fu	@1GHz					ISL (dB)		Limits	
	Vs (V)	Is (mA)	@-3dB (GHz)	NF (dB)	Psat (dbm)	Gain (dB)	P1dB (dbm)	OIP3 (dbm)	1 GHz	2.2 GHz	Vs (V)	Is (mA)
BGM1420	5	21	2.7	**2.5**	-6	14	-8	4	**40**	**30**	6	50

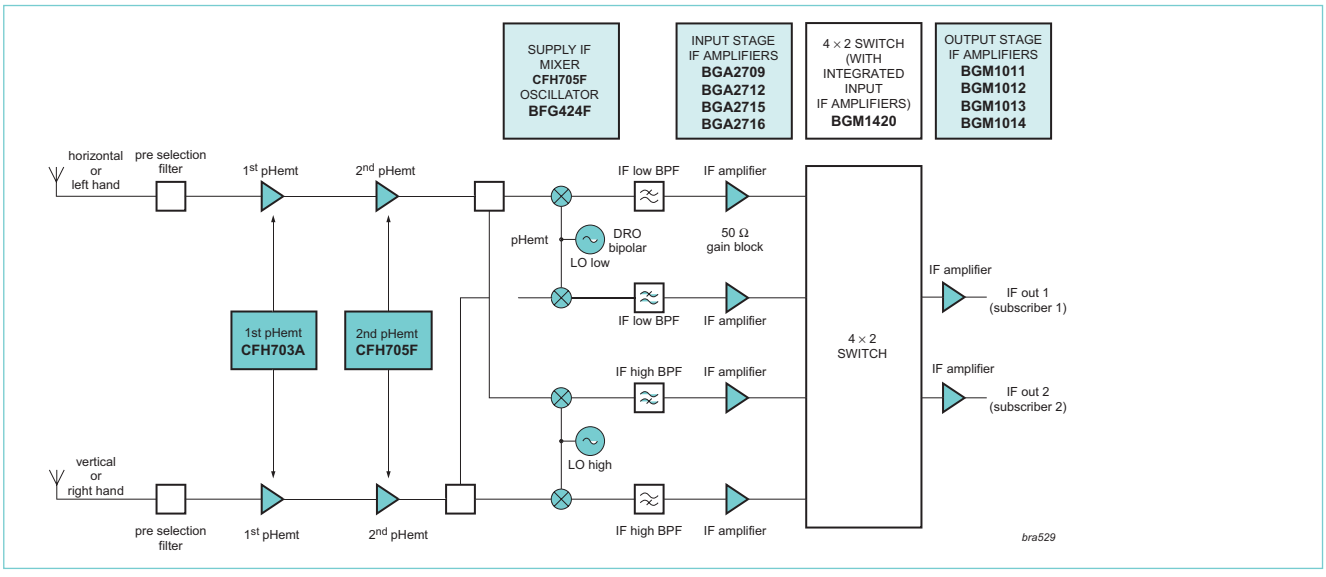

LNB complete solution block diagram

7. TZA30x6

TIAs for TO-can based ROSA applications up to 1250 Mbps

Designed for STM1/OC3, STM4/OC12, and FC/GE applications, these high-quality transimpedance preamplifiers have automatic gain control and provide low noise, a wide dynamic range, and low power dissipation.

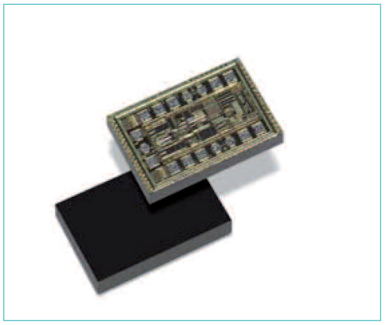

Key features

- High receiver sensitivity, low equivalent input noise
- Exceptionally wide bandwidths
- On-chip AGC with options for external control
- Input overload up to 1.5 mA pp
- Differential outputs
- Bias voltage for PIN diode
- Single 3.3-V supply voltage (range: 2.9 to 3.6 V)

Customer benefits

- Current output of average photo current for RSSI monitoring (SFF8472-compliant)
- Easy layout bonding
- Identical ports available on both sides of die
- RF polarity selection

Applications

- Digital fiber optic receiver modules (SFF/SFP transceivers)
- Telecommunications transmission systems
- High-speed data networks
- FTTx systems

The TZA30x6 family of transimpedance preamplifiers (TIAs) brings high receiver sensitivity, wide dynamic range, and low power dissipation to receiver optical sub assemblies (ROSA) applications that operate at up to 1250 Mbps. Each member of the family is optimized for a particular bit rate and transmission system.

Product No.	Bit Rate	Transmission System
TZA3036	155 Mbps	STM1/OC3
TZA3026	622 Mbps	STM4/OC12
TZA3046	1250 Mbps	FC/GE

The absence of offset control loops lets these devices operate from DC onwards and protects the output waveform from consecutive identical digits (CIDs).

High Receiver Sensitivity

By minimizing noise, TZA30x6 devices deliver exceptionally high receiver sensitivity. Typical noise levels, calculated with a lowpass bandwidth filter at a 0.7x bit rate and a source with an extinction ratio of 10% and a photodiode responsivity of 0.9A/W, are -40 (TZA3036), -32 (TZA3026), and -29 (TZA3046).

Wide Dynamic Range

To prevent excessive distortion at the output stage, each TZA30x6 device has an integrated automatic gain control (AGC) loop that reduces the preamplifier's feedback resistance. The AGC loop can be controlled externally and includes a hold capacitor, reducing external chip-count.

TO-can Assemblies

Small size, identical ports on both sides, and RF polarity selection make TZA30x6 devices easy to use with cost-effective TO-can assemblies. Short bonding wires to ground improve overall performance.

TZA30x6 Transimpedance Preamplifiers

Product	Application	Bit Rate (Mbps)	Sensitivity (S)[1]	In (nARMS)	Overload (mApp)	Gain (kOhmdiff)	Flow (Hz)	Fhigh (-3dB)
TZA3036	STM1/OC3	155	-40	10	1.5	69.0	DC	160 MHz
TZA3026	STM4/OC12	622	-32	67	1.5	14.0	DC	650 MHz
TZA3046	FC/GE	1250	-29	130	1.5	9.0	DC	1050 MHz

1 Calculated from noise figure using a lowpass bandwidth filter at 0.7x bit rate and a source with an extinction ratio of 10% and a photodiode responsivity of 0.9A/W.

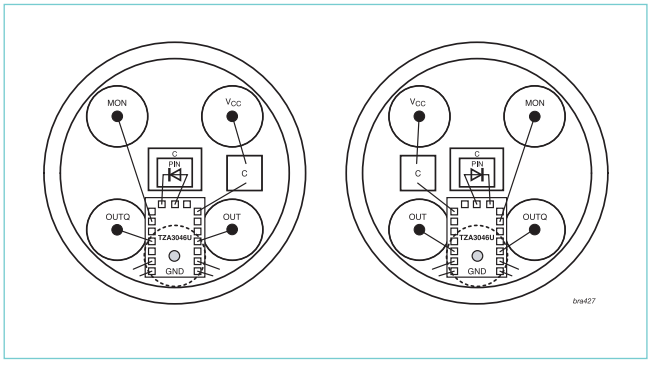

Possible TZA30x6 application highlighting flexible pad layout

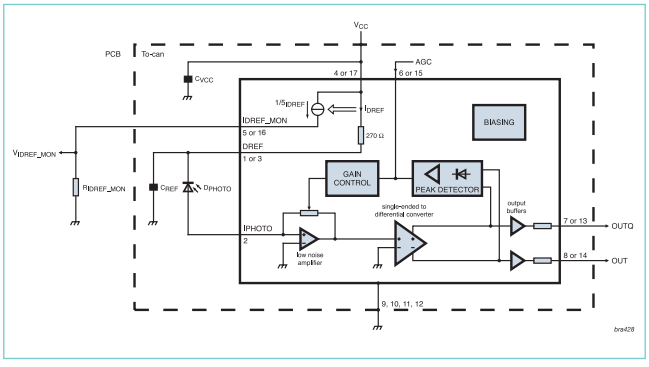

TZA30x6 application diagram

8. Contacts and Web Links

How to contact your authorized distributor or local Philips representative:

Authorized distributors:
Asia Pacific:
http://www.semiconductors. philips.com/profile/sales/asia_pacific_dist/

Europe / Africa / Middle East:
http://www.semiconductors.philips.com/profile/sales/europe_dist/

North America:
http://www.semiconductors.philips.com/profile/sales/northamerica_dist/

South America:
http://www.semiconductors.philips.com/profile/sales/southamerica_dist/

Local Philips Offices:
Asia Pacific:
http://www.semiconductors.philips.com/profile/sales/asia_pacific/

Europe / Africa / Middle East:
http://www.semiconductors.philips.com/profile/sales/europe/

North America:
http://www.semiconductors.philips.com/profile/sales/northamerica/

South America:
http://www.semiconductors.philips.com/profile/sales/southamerica/

Web Links
Philips Semiconductors:
http://www.semiconductors.philips.com

Philips RF Manual web page:
http://www.semiconductors.philips.com/markets/mms/products/discretes/documentation/rf_manual/

Philips product selector:
http://www.semiconductors.philips.com/products/selector/27046/index.html

Philips RF discretes catalogue:
http://www.semiconductors.philips.com/cgi-bin/catalog/catalog.pl/mms/219/282/^27046/

Philips varicaps:
http://www.semiconductors.philips.com/markets/mms/products/discretes/featured_products/rf_varicaps/

Philips RF PIN diodes:
http://www.semiconductors.philips.com/markets/mms/products/discretes/key_solutions/multimarket/diodes/pin_diodes/index.html

Philips RF Schottky diodes:
http://www.semiconductors.philips.com/markets/mms/products/discretes/key_solutions/multimarket/diodes/low_cd_schottky/index.html

Philips RF MMICs:
http://www.semiconductors.philips.com/markets/mms/products/discretes/mmic/index.html
Philips RF wideband transistors:
http://www.semiconductors.philips.com/markets/mms/products/discretes/key_solutions/multimarket/transistors/25_45ghz_wideband/index.html

Philips RF CATV electrical & optical
http://www.semiconductors.philips.com/markets/communications/applications/infrastructure/catv/index.html

Philips optical networking
http://www.semiconductors.philips.com/markets/computing/applications/optical/index.html

Philips RF applications:
http://www.semiconductors.philips.com/markets/mms/applications/index.html

Philips application notes:
http://www.semiconductors.philips.com/markets/mms/documentation/app_notes/

Philips application notes - MMICs:
http://www.semiconductors.philips.com/markets/mms/products/discretes/documentation/mmic_amplifiers_mixers/

Philips application notes - transistors:
http://www.semiconductors.philips.com/markets/mms/products/discretes/documentation/transistors/

Philips cross-references:
http://www.semiconductors.philips.com/products/xref/

Philips green packaging:
http://www.semiconductors.philips.com/green_roadmap/

Philips end-of-life:
http://www.semiconductors.philips.com/products/eol/

Philips Quality Handbook:
http://www.standardics.philips.com/quality/handbook/

Philips literature:
http://www.semiconductors.philips.com/documentation/commercial/mms/discretes.html

Philips packaging:
http://www.semiconductors.philips.com/package/index.html

Philips green packaging:
http://www.semiconductors.philips.com/green_roadmap/

Philips sales offices and distributors:
http://www.semiconductors.philips.com/profile/sales/index.html

Philips Semiconductors

Philips Semiconductors is one of the world's top semiconductor suppliers, with 20 manufacturing and assembly sites and a sales organization that delivers in 60 countries. For a complete up-to-date list of our sales offices please visit our website http://www.semiconductors.philips.com/sales

©2005 Koninklijke Philips Electronics N.V.

All rights reserved. Reproduction in whole or in part is prohibited without the prior written consent of the copyright owner. The information presented in this document does not form part of any quotation or contract, is believed to be accurate and reliable and may be changed without notice. No liability will be accepted by the publisher for any consequence of its use. Publication thereof does not convey nor imply any license under patent- or other industrial or intellectual property rights.

date of release: November 2005

document order number: 9397 750 15371